This drawing is Perstorp Tekniska Gymnasium property and is protected according to existing law and may not without our approval be copied, imparted anyone or used without authorization

Revision history			
Rev.	Description	Created by	Rev. date

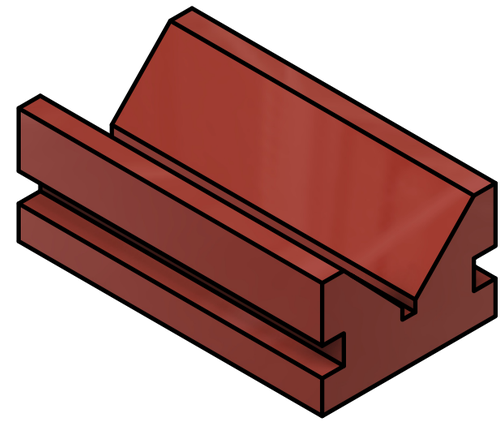

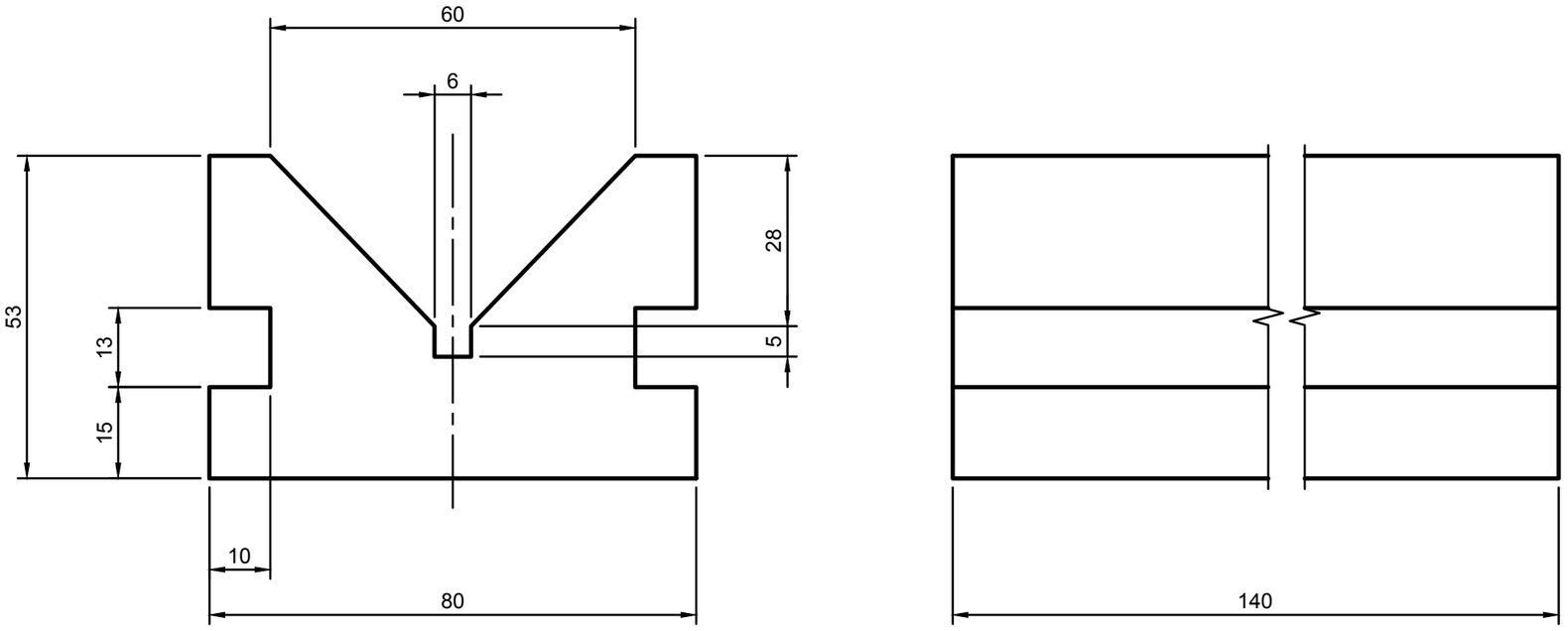

Item	Qty	Part Number	Material	Mass
1	1	B1	Al 4120	1.14 kg

Parts List

General Tolerances		
Weld constr. ISO 5817 Class C	Castings ISO 8062 CT12	Threads ISO 965 6H/6g
Linear and angular dimensions		
Machined with cutting tools (does not include sawing)	ISO 2768-1-m	
Machined with non cutting tools (includes sawing)	ISO 2768-1-v	
Broken edges and angular dimensions	ISO 2768-1-c	

School subject: CAD1/CAD2	Scale: 1:1	Created by: Jorgen Nilsson	Approved by:
PERSTORP TEKNISKA GYMNASIUM		Document type: FUSION 360 Drawing	Approved date:
First angle projection		Title: B1 Modeling exercise	DWG No.: PG-241172
			Rev.: 0 / Date of issue: 2024-01-28 / Sheet: 1/1

This drawing is Perstorp Tekniska Gymnasium property and is protected according to existing law and may not without our approval be copied, imparted anyone or used without authorization

Revision history			
Rev.	Description	Created by	Rev. date

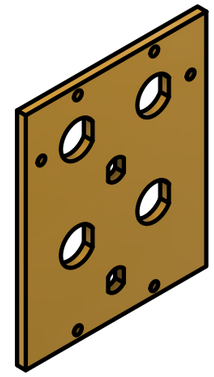

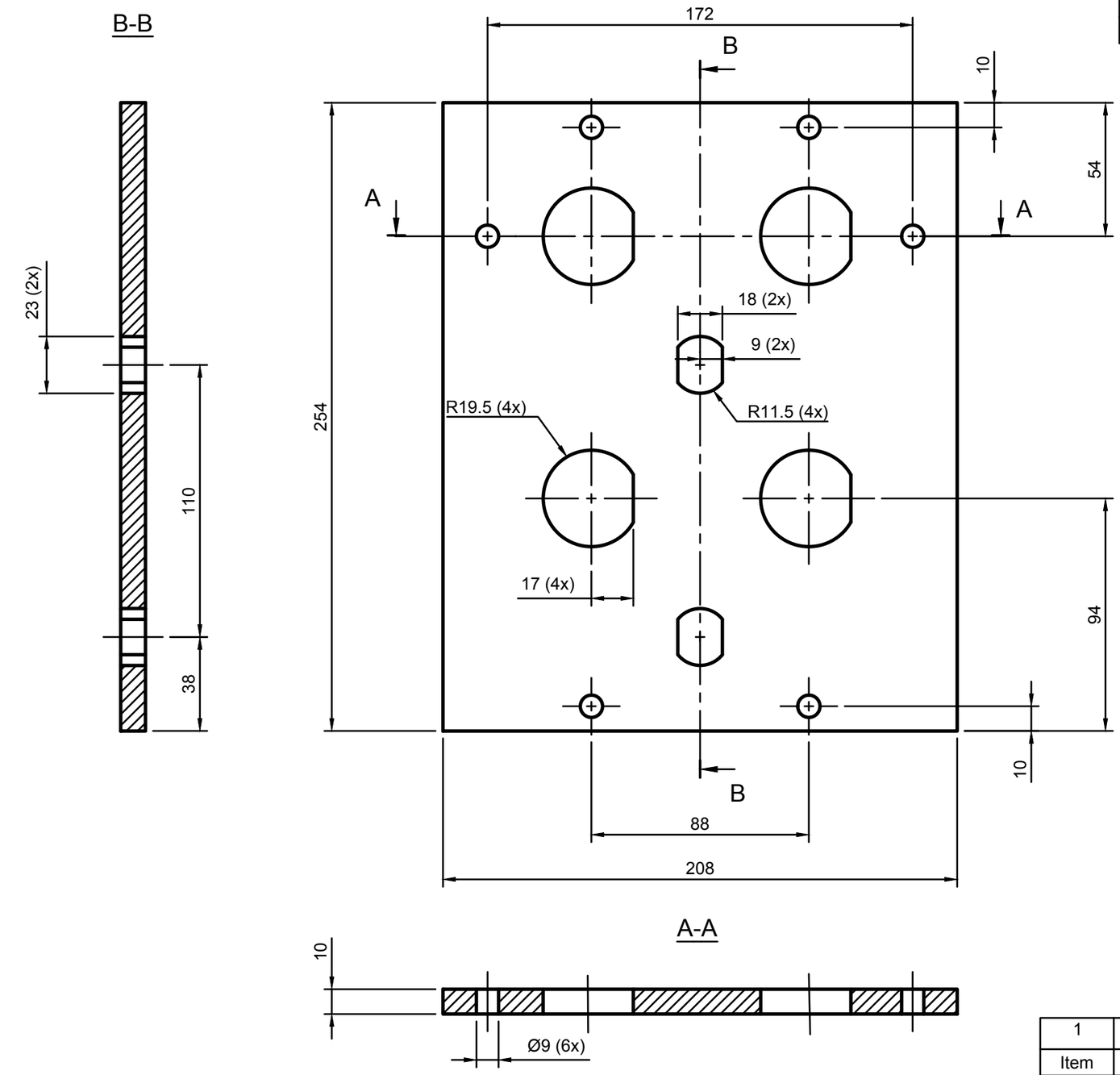

Item	Qty	Part Number	Material	Mass
1	1	B2	Domex 500	3.69 kg

Parts List

General Tolerances		
Weld constr. ISO 5817 Class C	Castings ISO 8062 CT12	Threads ISO 965 6H/6g
Linear and angular dimensions		
Machined with cutting tools (does not include sawing)	ISO 2768-1-m	
Machined with non cutting tools (includes sawing)	ISO 2768-1-v	
Broken edges and angular dimensions	ISO 2768-1-c	

School subject: CAD1/CAD2	Scale: 1:2	Created by: Jorgen Nilsson	Approved by:
PERSTORP TEKNISKA GYMNASIUM		Document type: FUSION 360 Drawing	Approved date:
First angle projection		Title: B2 Modeling exercise	DWG No.: PG-241181
			Rev.: 0 / Date of issue: 2024-04-10 / Sheet: 1/1

This drawing is Perstorp Tekniska Gymnasium property and is protected according to existing law and may not without our approval be copied, imparted anyone or used without authorization

Revision history			
Rev.	Description	Created by	Rev. date

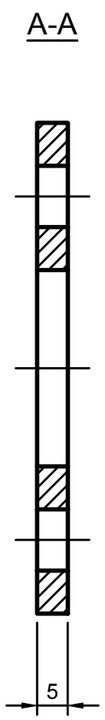

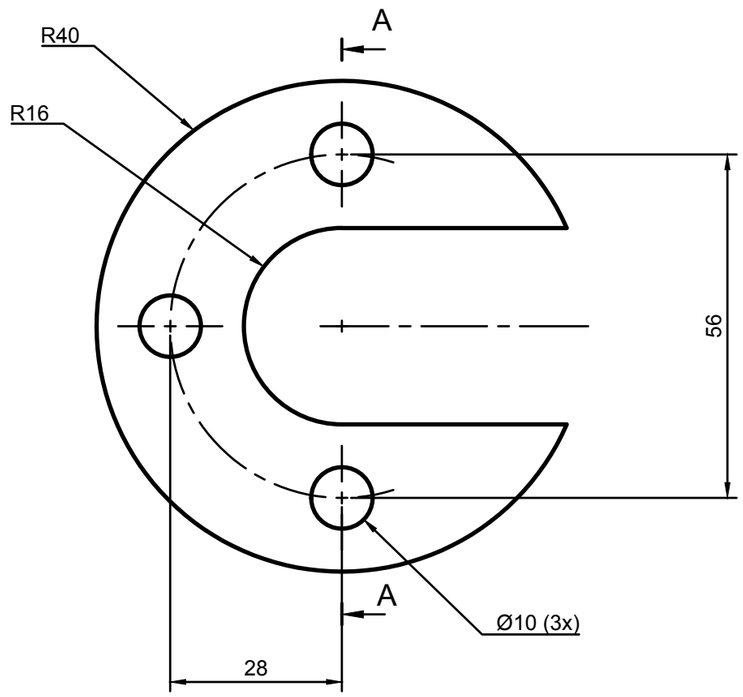

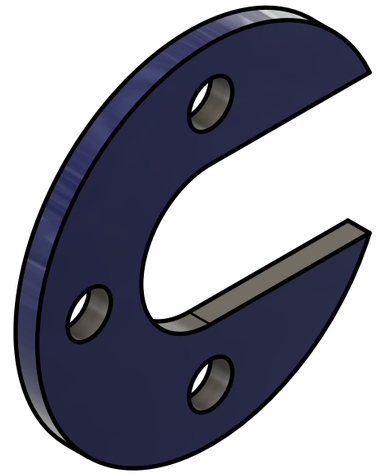

Item	Qty	Part Number	Material	Mass
1	1	B3	Domex 500	0.12 kg

Parts List

General Tolerances		
Weld constr. ISO 5817 Class C	Castings ISO 8062 CT12	Threads ISO 965 6H/6g
Linear and angular dimensions		
Machined with cutting tools (does not include sawing)	ISO 2768-1-m	
Machined with non cutting tools (includes sawing)	ISO 2768-1-v	
Broken edges and angular dimensions	ISO 2768-1-c	

School subject: CAD1/CAD2	Scale: 1:1	Created by: Jorgen Nilsson	Approved by:
PERSTORP TEKNISKA GYMNASIUM		Document type: FUSION 360 Drawing	Approved date:
First angle projection		Title: B3 Modeling exercise	DWG No.: PG-241101
			Rev.: 0 / Date of issue: 2024-04-10 / Sheet: 1/1

This drawing is Perstorp Tekniska Gymnasium property and is protected according to existing law and may not without our approval be copied, imparted anyone or used without authorization

Revision history			
Rev.	Description	Created by	Rev. date

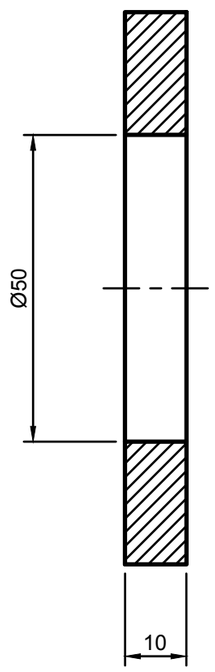

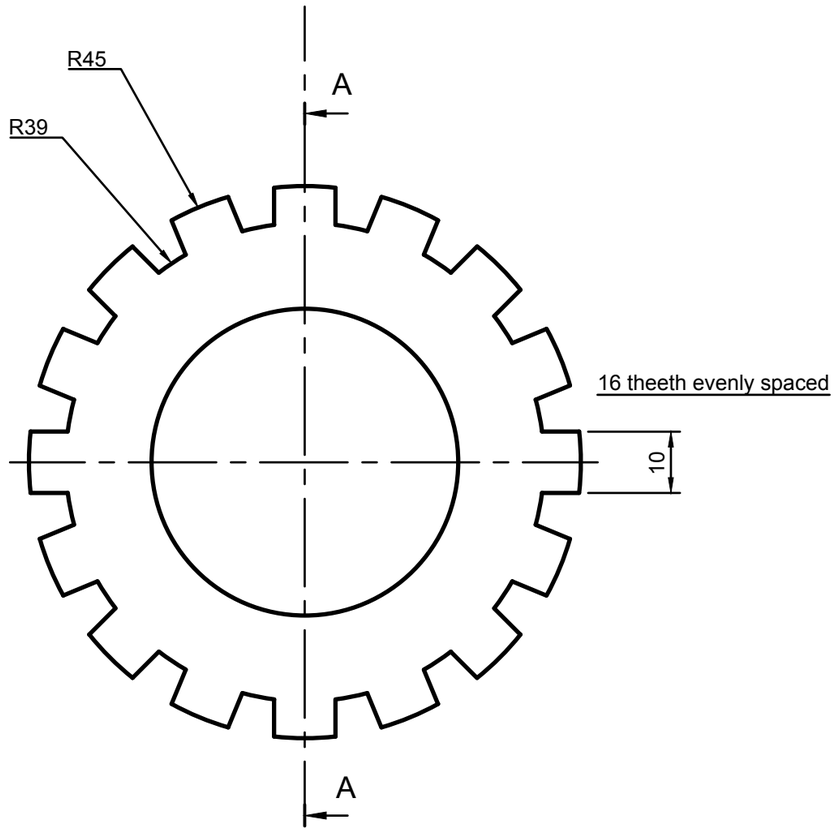

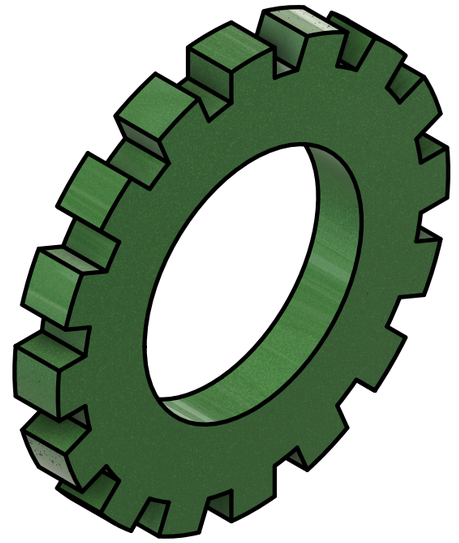

Item	Qty	Part Number	Material	Mass
1	1	B4	Al 4120	0.10 kg

Parts List

General Tolerances		
Weld constr. ISO 5817 Class C	Castings ISO 8062 CT12	Threads ISO 965 6H/6g
Linear and angular dimensions		
Machined with cutting tools (does not include sawing)	ISO 2768-1-m	
Machined with non cutting tools (includes sawing)	ISO 2768-1-v	
Broken edges and angular dimensions	ISO 2768-1-c	

School subject: CAD1/CAD2	Scale: 1:1	Created by: Jorgen Nilsson	Approved by:
PERSTORP TEKNISKA GYMNASIUM		Document type: FUSION 360 Drawing	Approved date:
First angle projection		Title: B4 Modeling exercise	DWG No.: PG-241109
			Rev.: 0 / Date of issue: 2024-03-21 / Sheet: 1/1

This drawing is Perstorp Tekniska Gymnasium property and is protected according to existing law and may not without our approval be copied, imparted anyone or used without authorization

Revision history			
Rev.	Description	Created by	Rev. date

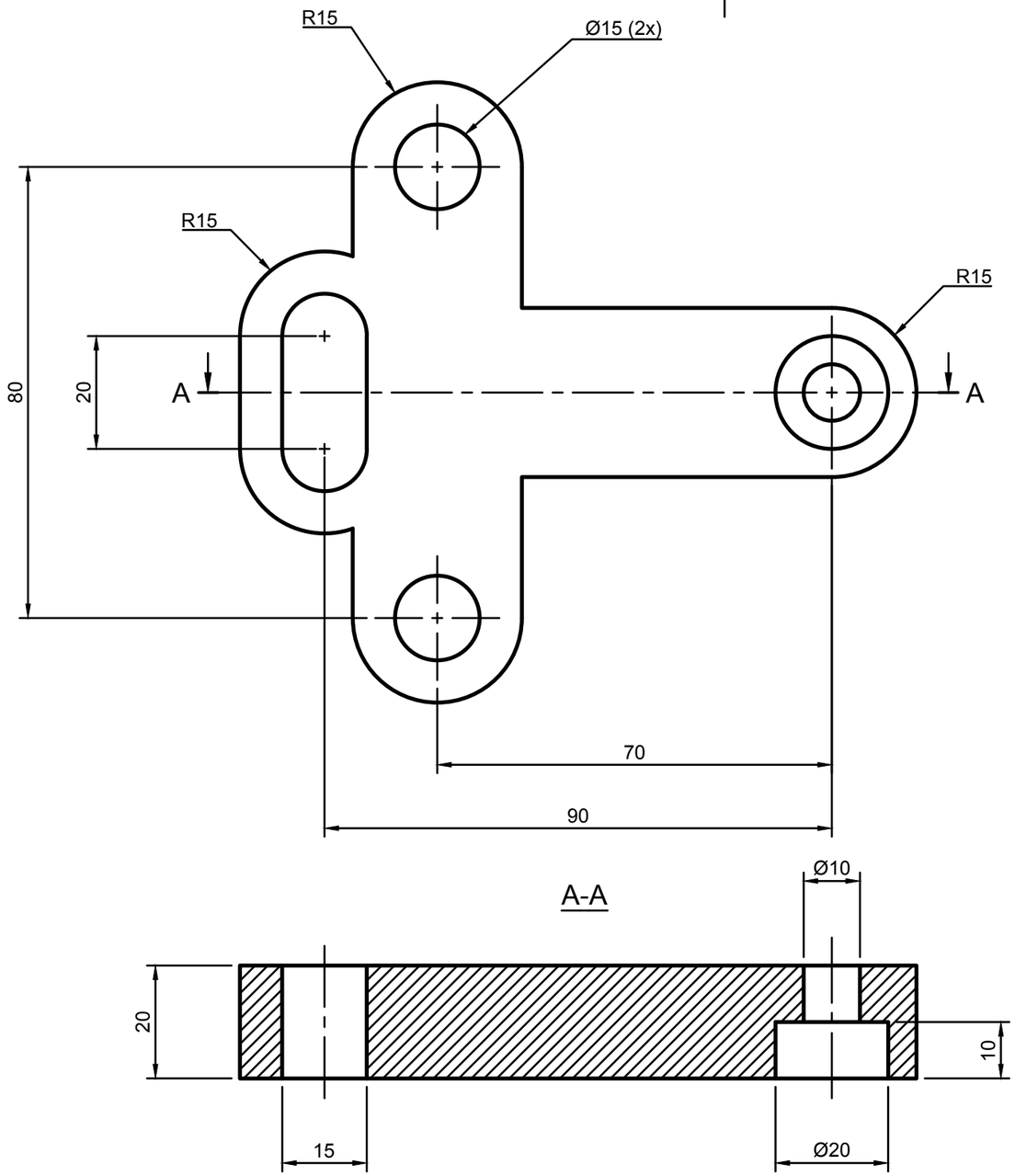

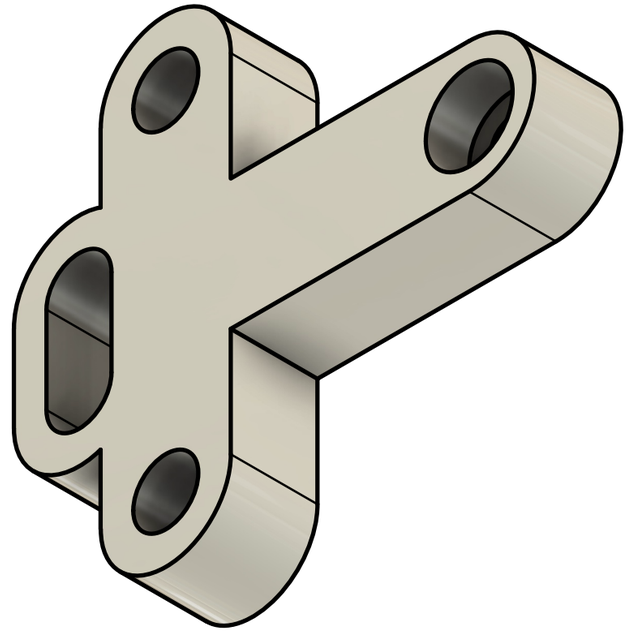

Item	Qty	Part Number	Material	Mass
1	1	B5	S355J2G3	0.78 kg

Parts List

General Tolerances		
Weld constr. ISO 5817 Class C	Castings ISO 8062 CT12	Threads ISO 965 6H/6g
Linear and angular dimensions		
Machined with cutting tools (does not include sawing)	ISO 2768-1-m	
Machined with non cutting tools (includes sawing)	ISO 2768-1-v	
Broken edges and angular dimensions	ISO 2768-1-c	

School subject: CAD1/CAD2	Scale: 1:1	Created by: Jorgen Nilsson	Approved by:
PERSTORP TEKNISKA GYMNASIUM		Document type: FUSION 360 Drawing	Approved date:
First angle projection		Title: B5 Modeling exercise	DWG No.: PG-241111
			Rev.: 0 / Date of issue: 2024-03-21 / Sheet: 1/1

This drawing is Perstorp Tekniska Gymnasium property and is protected according to existing law and may not without our approval be copied, imparted anyone or used without authorization

Revision history			
Rev.	Description	Created by	Rev. date

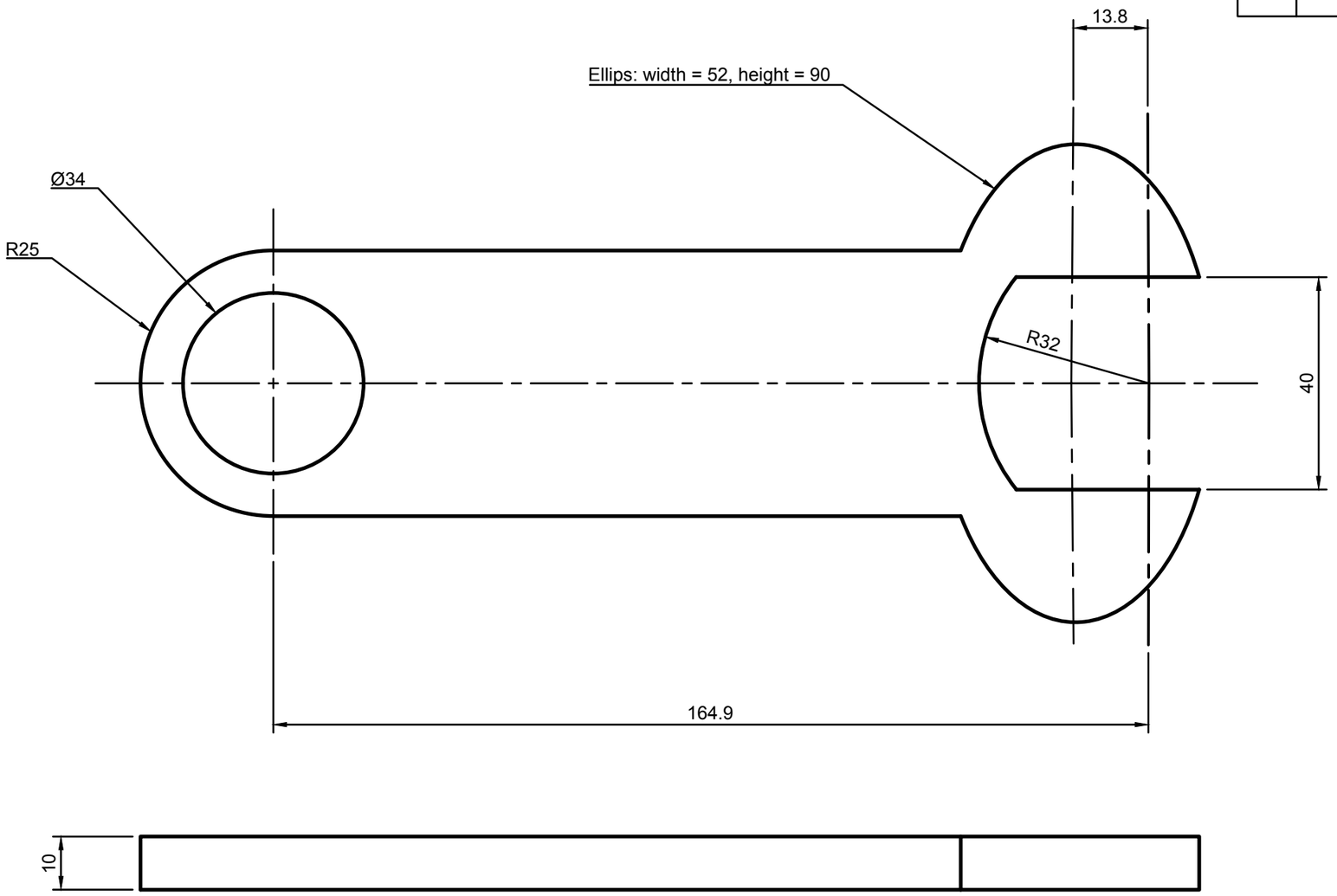

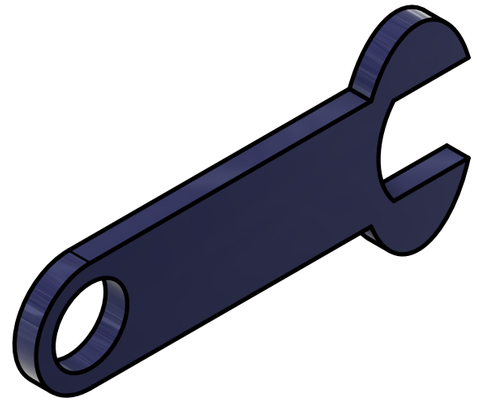

Item	Qty	Part Number	Material	Mass
1	1	B6	Plastic PLA	0.11 kg

Parts List

General Tolerances		
Weld constr. ISO 5817 Class C	Castings ISO 8062 CT12	Threads ISO 965 6H/6g
Linear and angular dimensions		
Machined with cutting tools (does not include sawing)	ISO 2768-1-m	
Machined with non cutting tools (includes sawing)	ISO 2768-1-v	
Broken edges and angular dimensions	ISO 2768-1-c	

School subject: CAD1/CAD2	Scale: 1:1	Created by: Jorgen Nilsson	Approved by:
PERSTORP TEKNISKA GYMNASIUM		Document type: FUSION 360 Drawing	Approved date:
First angle projection		Title: B6 Modeling exercise	DWG No.: PG-241116
			Rev.: 0 / Date of issue: 2024-03-22 / Sheet: 1/1

This drawing is Perstorp Tekniska Gymnasium property and is protected according to existing law and may not without our approval be copied, imparted anyone or used without authorization

Revision history			
Rev.	Description	Created by	Rev. date

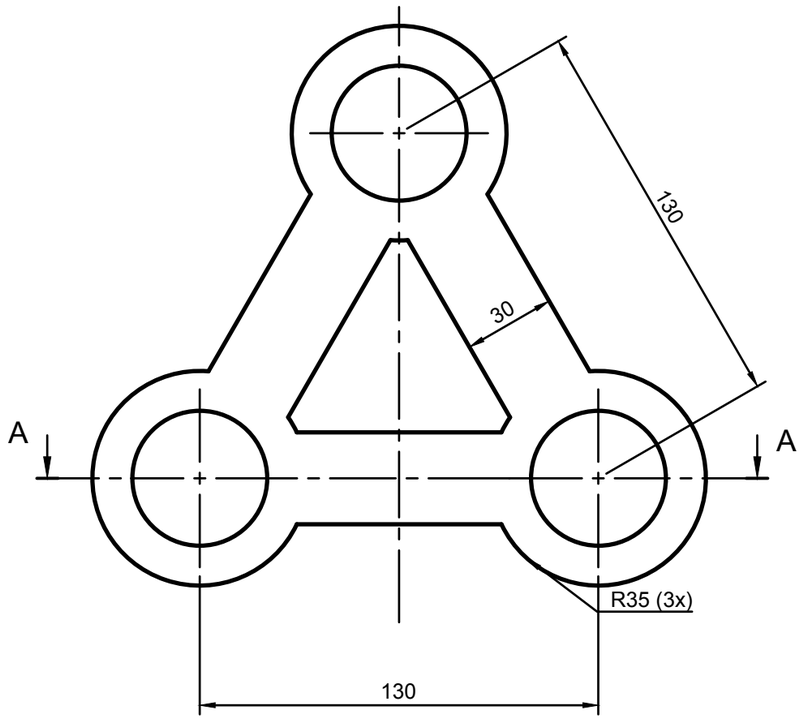

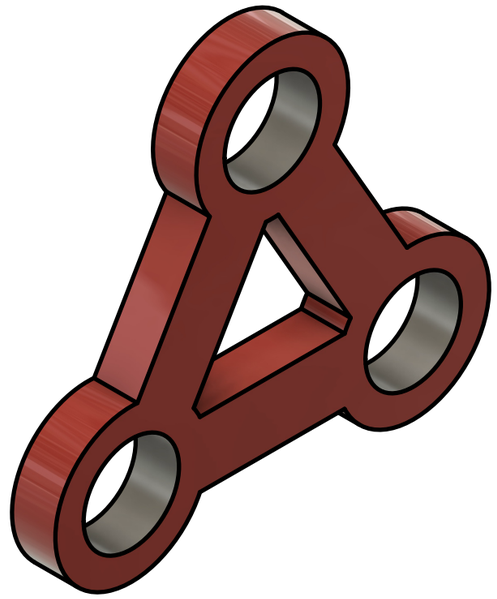

A-A

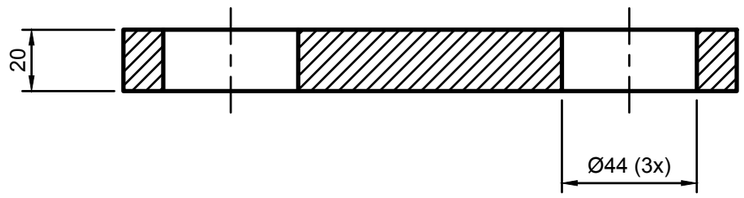

Item	Qty	Part Number	Material	Mass
1	1	B7	Plastic ABS	0.32 kg

Parts List

General Tolerances		
Weld constr. ISO 5817 Class C	Castings ISO 8062 CT12	Threads ISO 965 6H/6g
Linear and angular dimensions		
Machined with cutting tools (does not include sawing)	ISO 2768-1-m	
Machined with non cutting tools (includes sawing)	ISO 2768-1-v	
Broken edges and angular dimensions	ISO 2768-1-c	

School subject: CAD1/CAD2	Scale: 1:2	Created by: Jorgen Nilsson	Approved by:
PERSTORP TEKNISKA GYMNASIUM		Document type: FUSION 360 Drawing	Approved date:
First angle projection		Title: B7 Modeling exercise	DWG No.: PG-241133
			Rev.: 0 / Date of issue: 2024-03-21 / Sheet: 1/1

This drawing is Perstorp Tekniska Gymnasium property and is protected according to existing law and may not without our approval be copied, imparted anyone or used without authorization

Revision history			
Rev.	Description	Created by	Rev. date

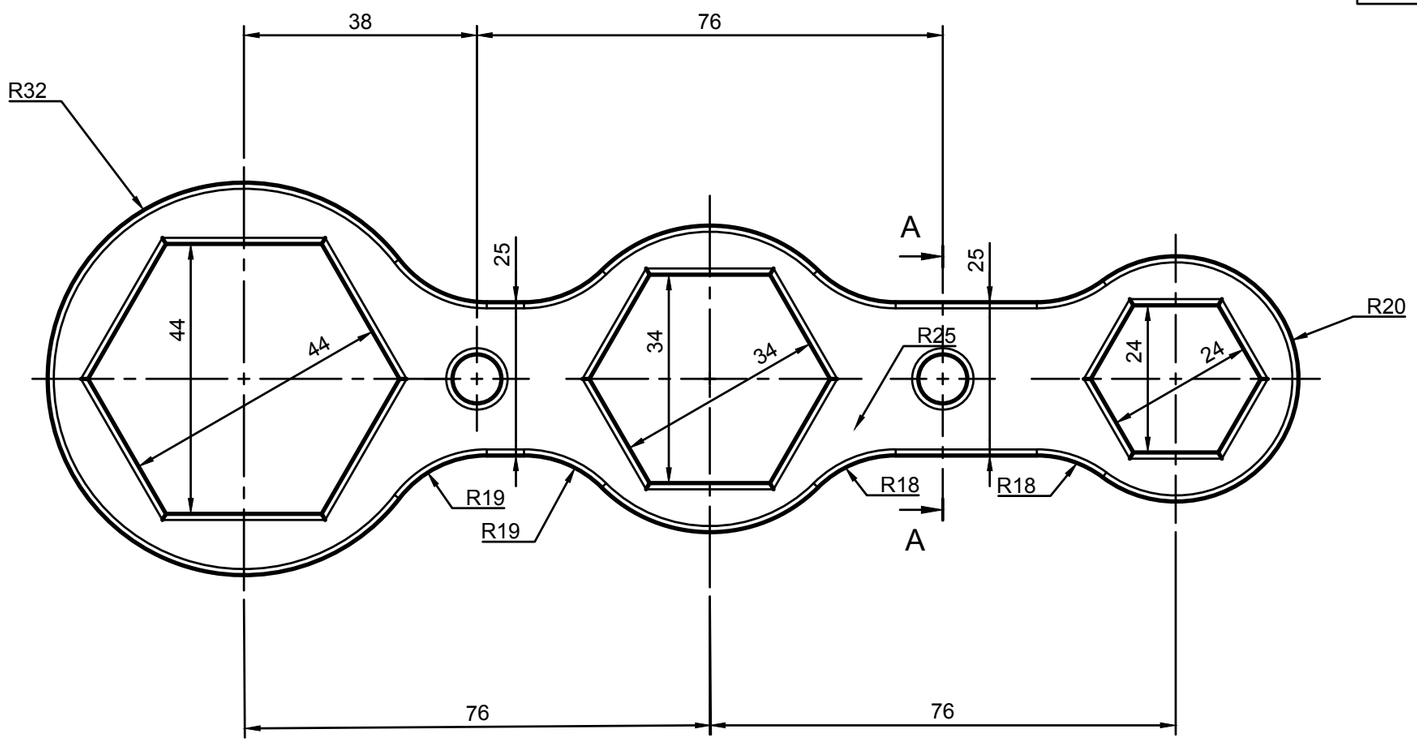

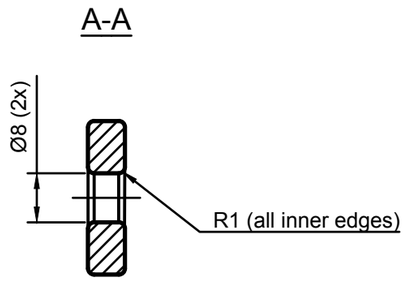

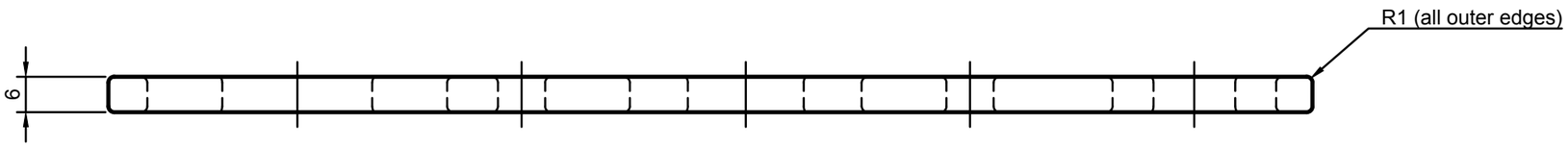

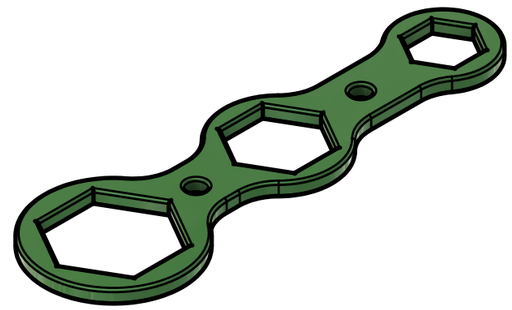

Item	Qty	Part Number	Material	Mass
1	1	B8	Stainless 1.4401	0.21 kg

Parts List

General Tolerances		
Weld constr. ISO 5817 Class C	Castings ISO 8062 CT12	Threads ISO 965 6H/6g
Linear and angular dimensions		
Machined with cutting tools (does not include sawing)		ISO 2768-1-m
Machined with non cutting tools (includes sawing)		ISO 2768-1-v
Broken edges and angular dimensions		ISO 2768-1-c

School subject: CAD1/CAD2	Scale: 1:1	Created by: Jorgen Nilsson	Approved by:
PERSTORP TEKNISKA GYMNASIUM		Document type: FUSION 360 Drawing	Approved date:
First angle projection		Title: B8 Modeling exercise	DWG No.: PG-242115
			Rev.: 0 / Date of issue: 2024-04-08 / Sheet: 1/1

This drawing is Perstorp Tekniska Gymnasium property and is protected according to existing law and may not without our approval be copied, imparted anyone or used without authorization

Revision history			
Rev.	Description	Created by	Rev. date

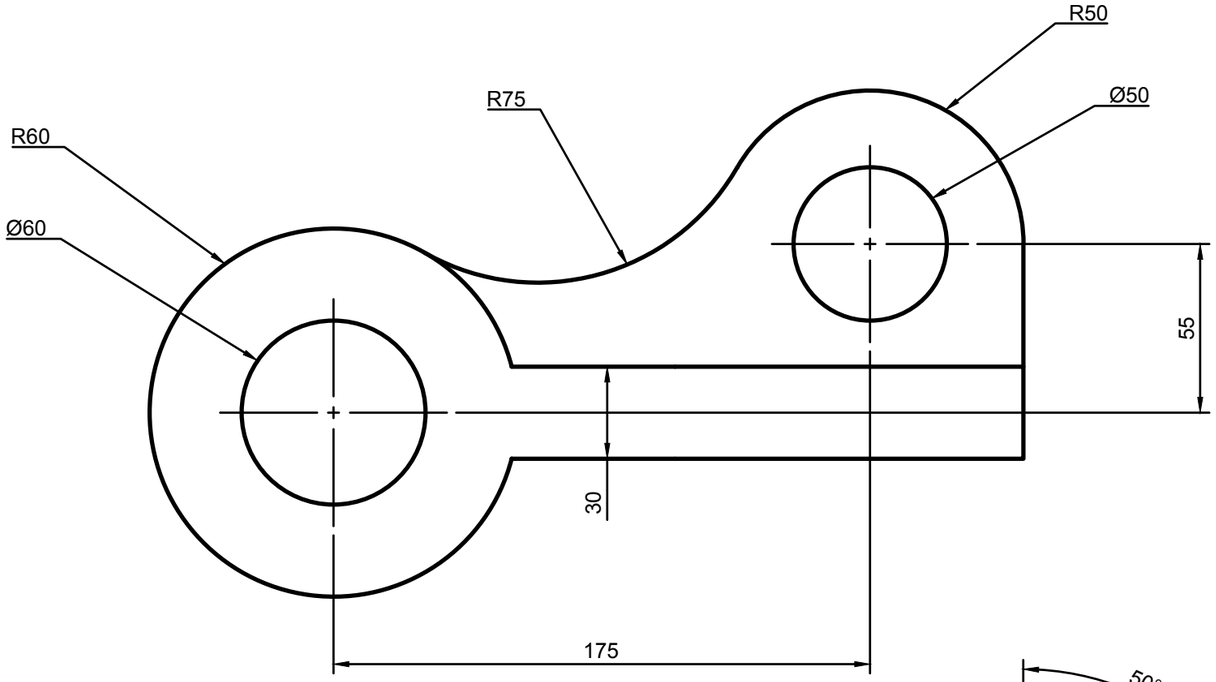

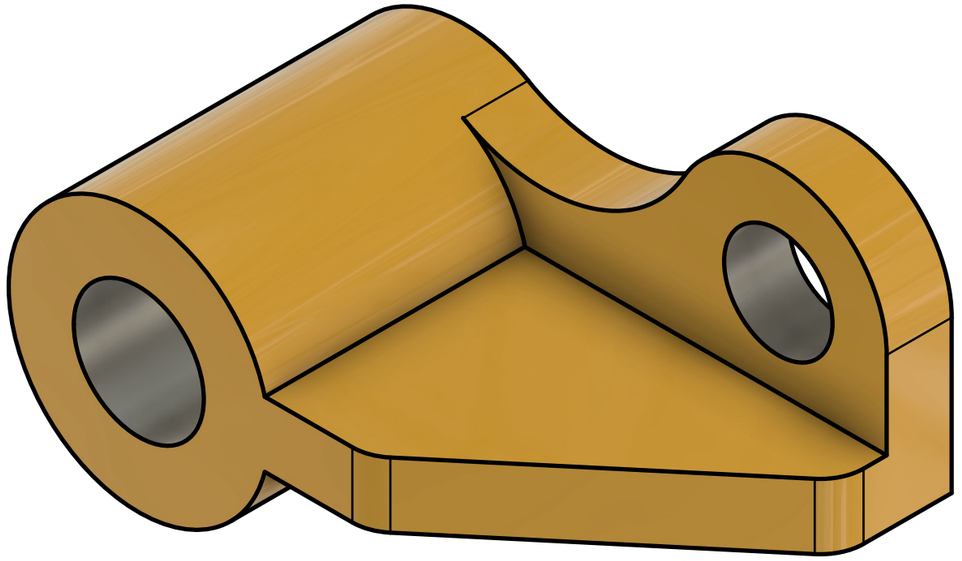

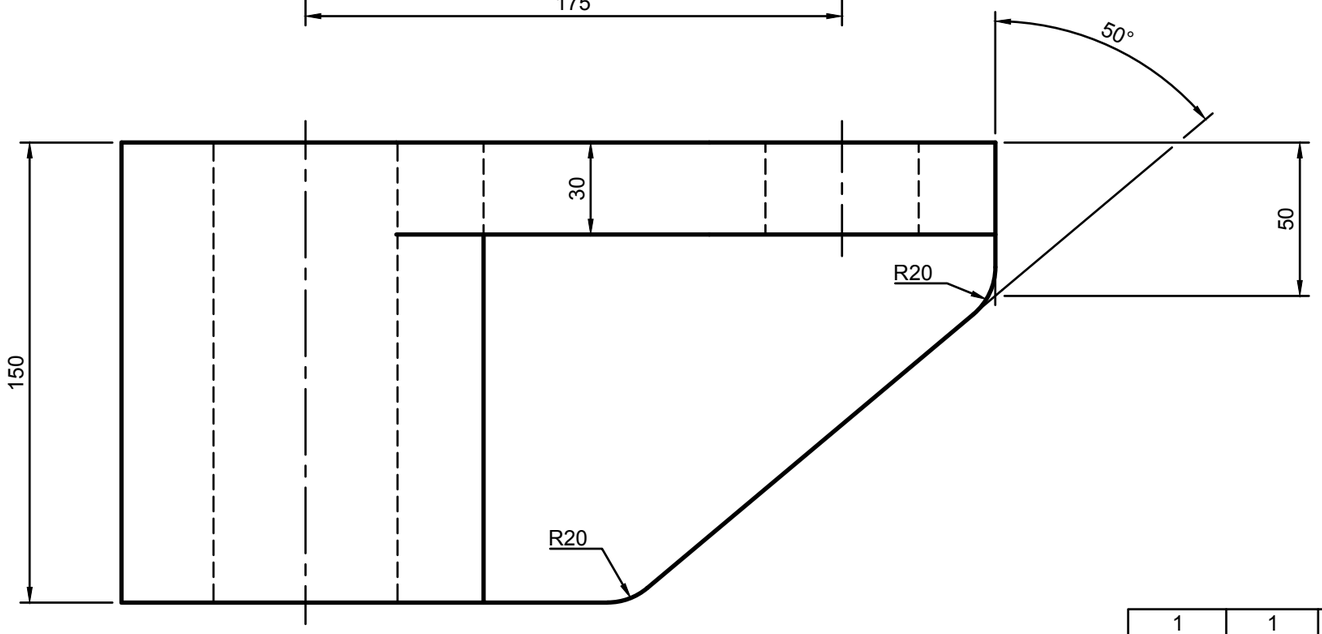

Item	Qty	Part Number	Material	Mass
1	1	B9	S355J2G3	16.44 kg

Parts List

General Tolerances		
Weld constr. ISO 5817 Class C	Castings ISO 8062 CT12	Threads ISO 965 6H/6g
Linear and angular dimensions		
Machined with cutting tools (does not include sawing)	ISO 2768-1-m	
Machined with non cutting tools (includes sawing)	ISO 2768-1-v	
Broken edges and angular dimensions	ISO 2768-1-c	

School subject: CAD1/CAD2	Scale: 1:2	Created by: Jorgen Nilsson	Approved by:
PERSTORP TEKNISKA GYMNASIUM		Document type: FUSION 360 Drawing	Approved date:
First angle projection		Title: B9 Modeling exercise	DWG No.: PG-242104
			Rev.: 0 / Date of issue: 2024-04-09 / Sheet: 1/1

This drawing is Perstorp Tekniska Gymnasium property and is protected according to existing law and may not without our approval be copied, imparted anyone or used without authorization

Revision history			
Rev.	Description	Created by	Rev. date

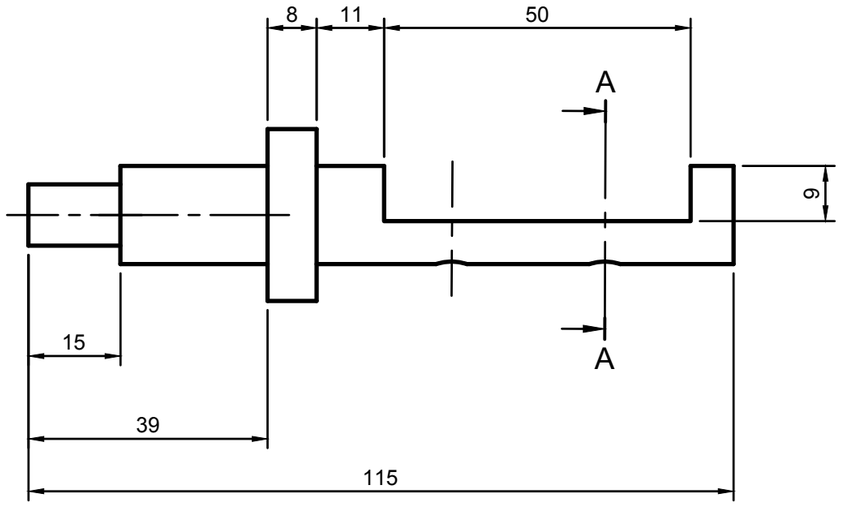

A-A (2:1)

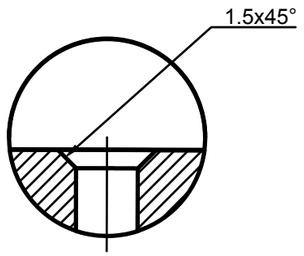

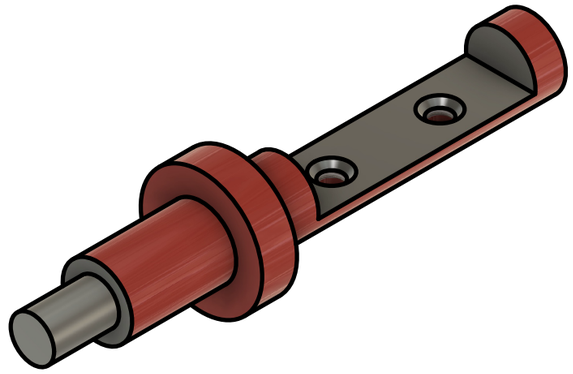

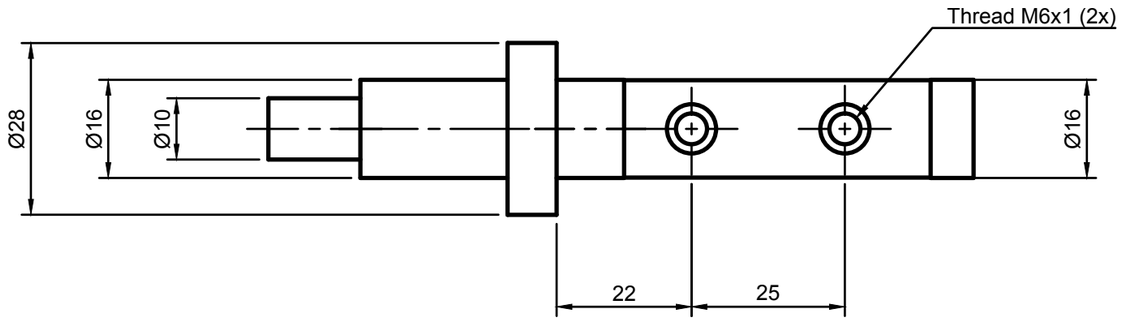

Item	Qty	Part Number	Material	Mass
1	1	B10	S355J2G3	0.14 kg

Parts List

General Tolerances		
Weld constr. ISO 5817 Class C	Castings ISO 8062 CT12	Threads ISO 965 6H/6g
Linear and angular dimensions		
Machined with cutting tools (does not include sawing)	ISO 2768-1-m	
Machined with non cutting tools (includes sawing)	ISO 2768-1-v	
Broken edges and angular dimensions	ISO 2768-1-c	

School subject: CAD1/CAD2	Scale: 1:1	Created by: Jorgen Nilsson	Approved by:
PERSTORP TEKNISKA GYMNASIUM		Document type: FUSION 360 Drawing	Approved date:
First angle projection		Title: B10 Modeling exercise	DWG No.: PG-242108
			Rev.: 0 / Date of issue: 2024-04-08 / Sheet: 1/1

This drawing is Perstorp Tekniska Gymnasium property and is protected according to existing law and may not without our approval be copied, imparted anyone or used without authorization

Revision history			
Rev.	Description	Created by	Rev. date

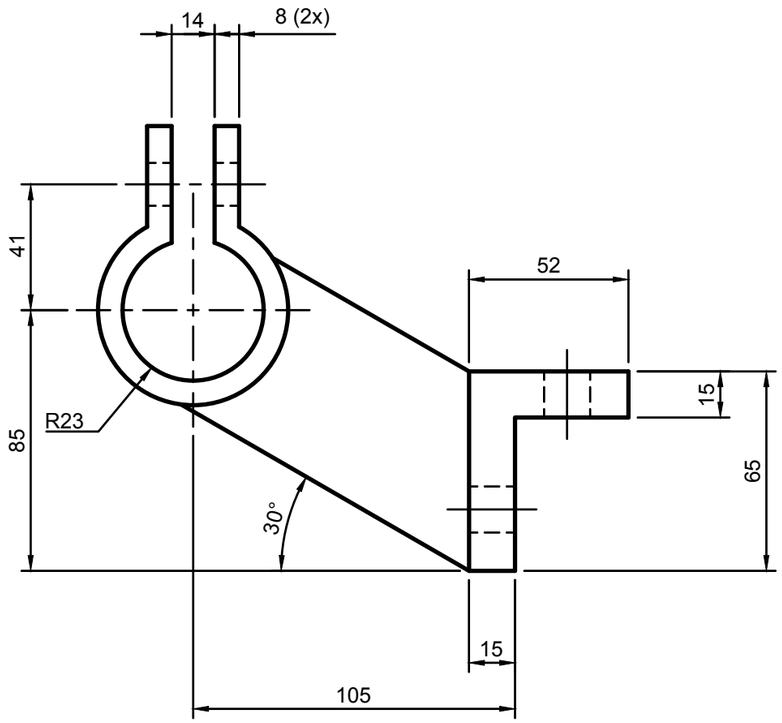

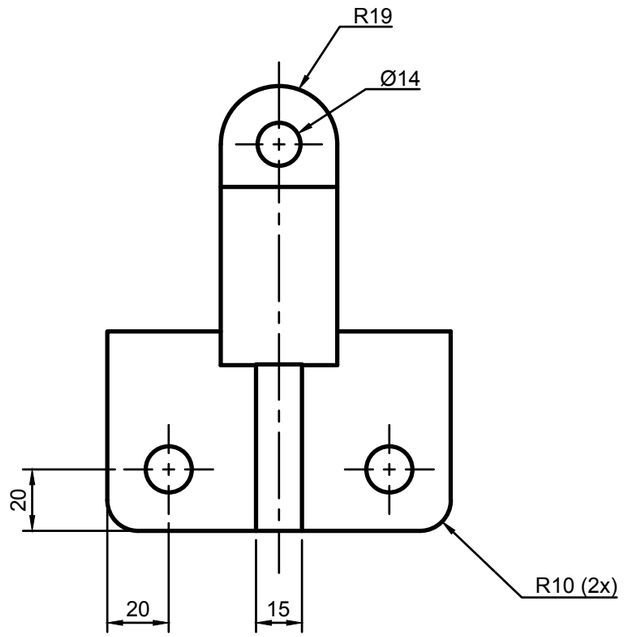

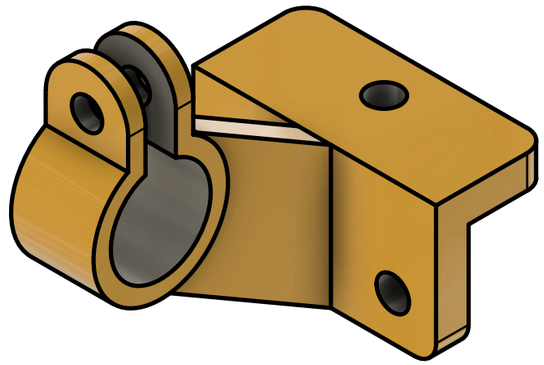

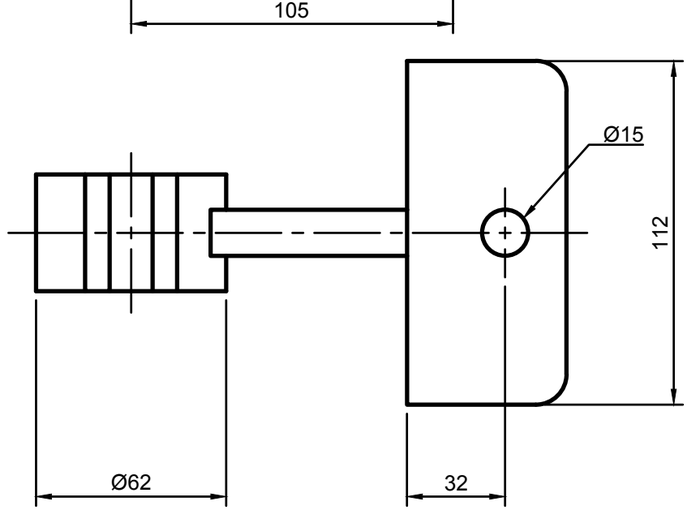

Item	Qty	Part Number	Material	Mass
1	1	B11	S355J2G3	2.27 kg

Parts List

General Tolerances		
Weld constr. ISO 5817 Class C	Castings ISO 8062 CT12	Threads ISO 965 6H/6g
Linear and angular dimensions		
Machined with cutting tools (does not include sawing)	ISO 2768-1-m	
Machined with non cutting tools (includes sawing)	ISO 2768-1-v	
Broken edges and angular dimensions	ISO 2768-1-c	

School subject: CAD1/CAD2	Scale: 1:2	Created by: Jorgen Nilsson	Approved by:
PERSTORP TEKNISKA GYMNASIUM		Document type: FUSION 360 Drawing	Approved date:
First angle projection		Title: B11 Modeling exercise	DWG No.: PG-24165
			Rev.: 0 / Date of issue: 2024-04-13 / Sheet: 1/1

This drawing is Perstorp Tekniska Gymnasium property and is protected according to existing law and may not without our approval be copied, imparted anyone or used without authorization

Revision history			
Rev.	Description	Created by	Rev. date

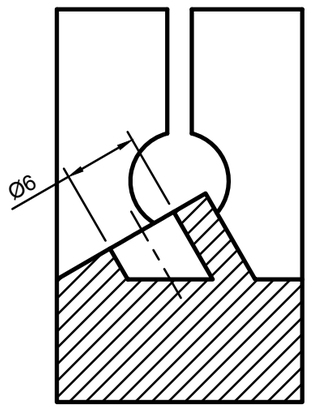

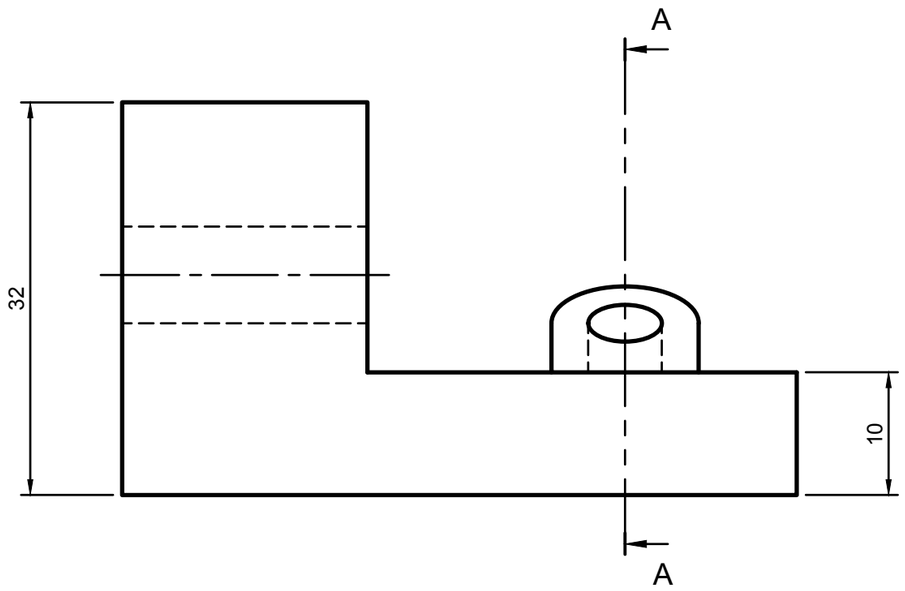

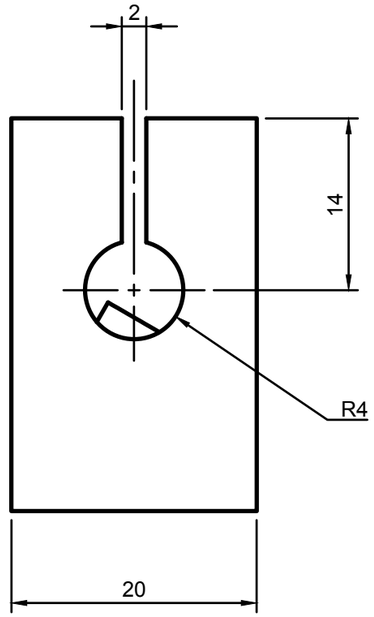

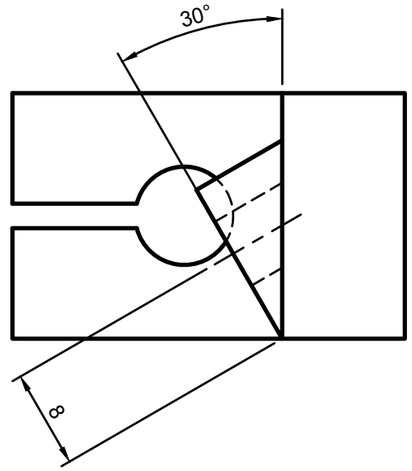

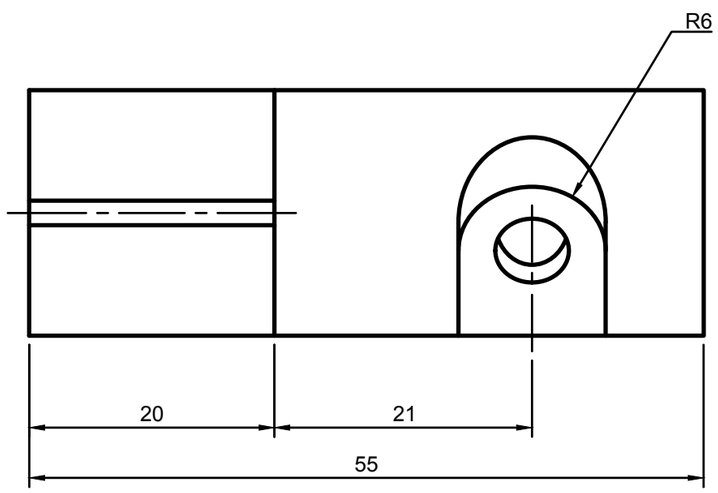

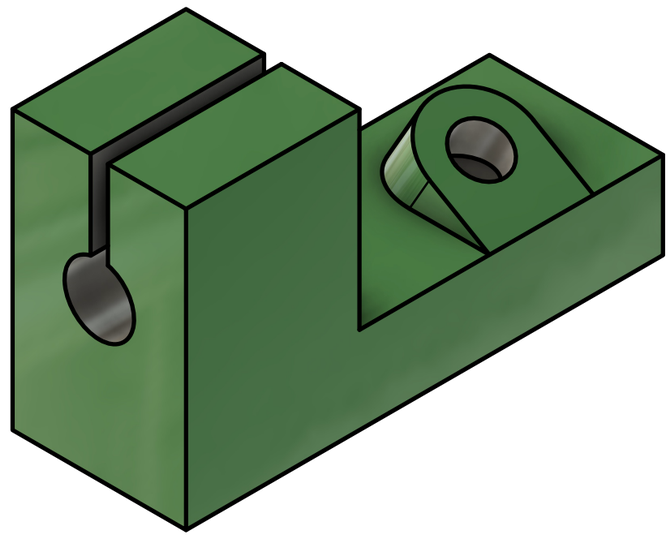

Item	Qty	Part Number	Material	Mass
1	1	B12	Plastic PLA	0.02 kg

Parts List

General Tolerances		
Weld constr. ISO 5817 Class C	Castings ISO 8062 CT12	Threads ISO 965 6H/6g
Linear and angular dimensions		
Machined with cutting tools (does not include sawing)	ISO 2768-1-m	
Machined with non cutting tools (includes sawing)	ISO 2768-1-v	
Broken edges and angular dimensions	ISO 2768-1-c	

School subject: CAD1/CAD2	Scale: 2:1	Created by: Jorgen Nilsson	Approved by:
PERSTORP TEKNISKA GYMNASIUM		Document type: FUSION 360 Drawing	Approved date:
First angle projection		Title: B12 Modeling exercise	DWG No.: PG-242102
			Rev.: 0 / Date of issue: 2024-04-08 / Sheet: 1/1

R0

This drawing is Perstorp Tekniska Gymnasium property and is protected according to existing law and may not without our approval be copied, imparted anyone or used without authorization

Revision history			
Rev.	Description	Created by	Rev. date

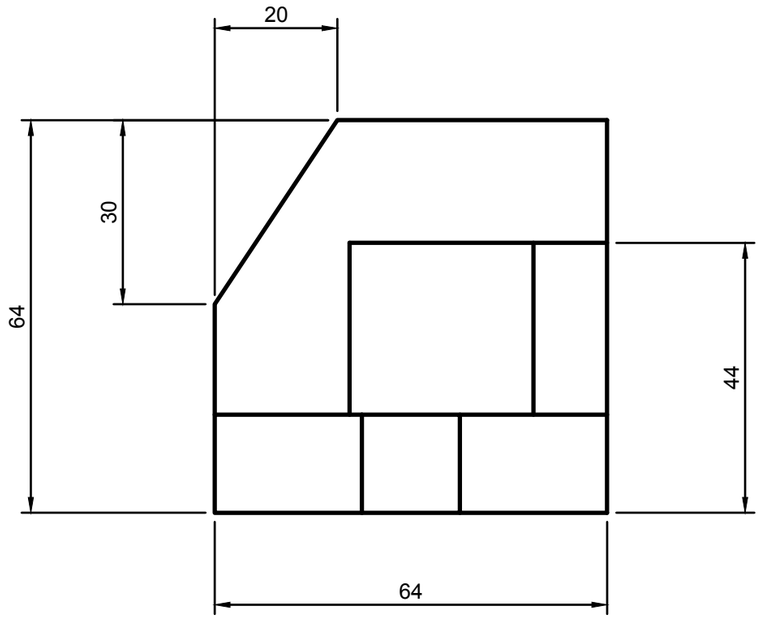

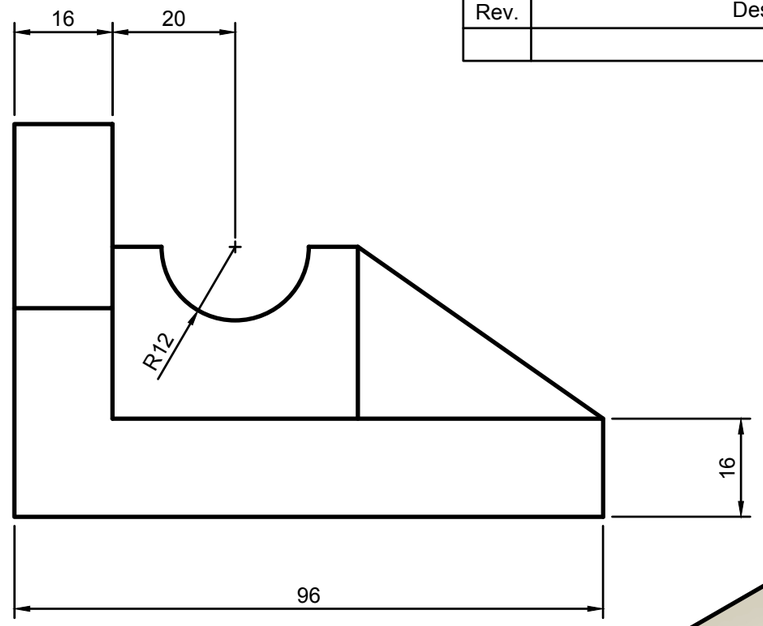

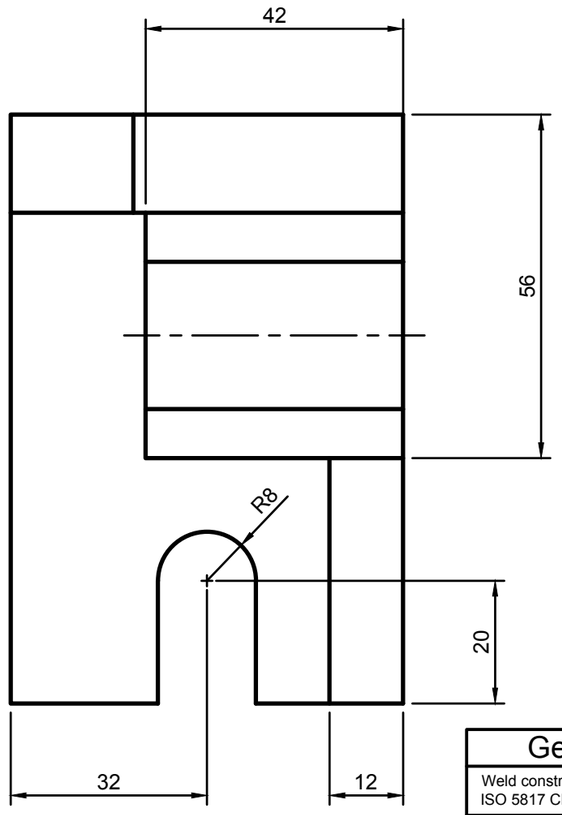

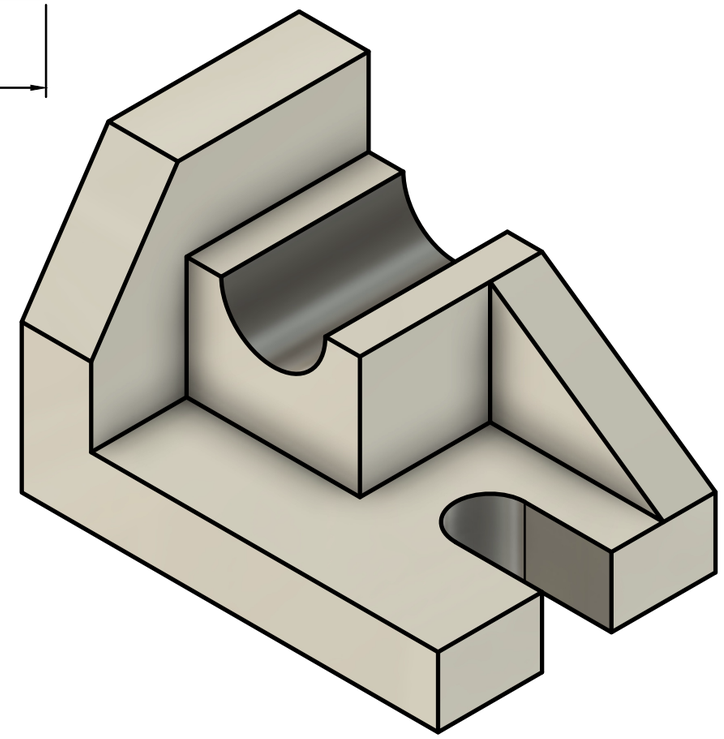

Item	Qty	Part Number	Material	Mass
1	1	B13	S355J2G3	1.41 kg

Parts List

General Tolerances		
Weld constr. ISO 5817 Class C	Castings ISO 8062 CT12	Threads ISO 965 6H/6g
Linear and angular dimensions		
Machined with cutting tools (does not include sawing)	ISO 2768-1-m	
Machined with non cutting tools (includes sawing)	ISO 2768-1-v	
Broken edges and angular dimensions	ISO 2768-1-c	

School subject: CAD1/CAD2	Scale: 1:1	Created by: Jorgen Nilsson	Approved by:
PERSTORP TEKNISKA GYMNASIUM		Document type: FUSION 360 Drawing	Approved date:
First angle projection		Title: B13 Modeling Exercise	DWG No.: PG-24163
			Rev.: 0 / Date of issue: 2024-04-13 / Sheet: 1/1

This drawing is Perstorp Tekniska Gymnasium property and is protected according to existing law and may not without our approval be copied, imparted anyone or used without authorization

Revision history			
Rev.	Description	Created by	Rev. date

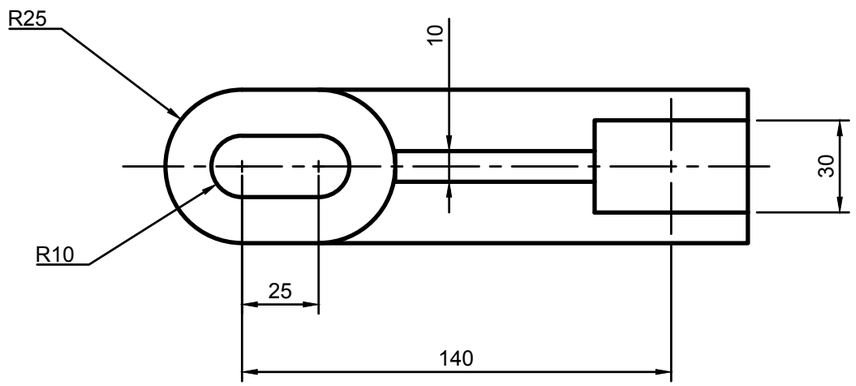

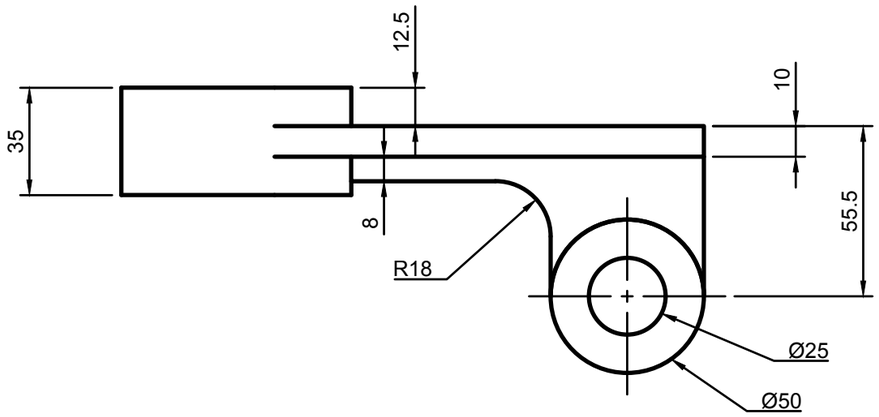

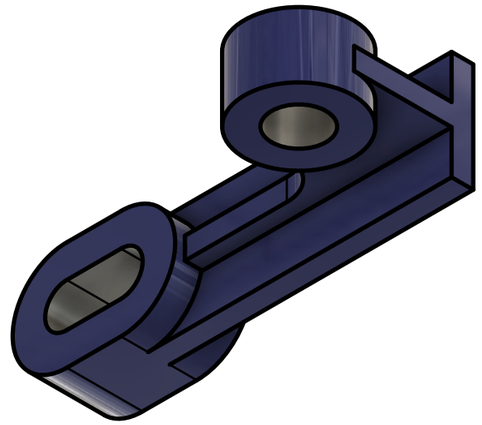

Item	Qty	Part Number	Material	Mass
1	1	B14	S355J2G3	1.63 kg

Parts List

General Tolerances		
Weld constr. ISO 5817 Class C	Castings ISO 8062 CT12	Threads ISO 965 6H/6g
Linear and angular dimensions		
Machined with cutting tools (does not include sawing)	ISO 2768-1-m	
Machined with non cutting tools (includes sawing)	ISO 2768-1-v	
Broken edges and angular dimensions	ISO 2768-1-c	

School subject: CAD1/CAD2	Scale: 1:2	Created by: Jorgen Nilsson	Approved by:
PERSTORP TEKNISKA GYMNASIUM		Document type: FUSION 360 Drawing	Approved date:
First angle projection		Title: B14 Modeling exercise	DWG No.: PG-24161
			Rev.: 0 / Date of issue: 2024-04-13 / Sheet: 1/1

Revision history			
Rev.	Description	Created by	Rev. date

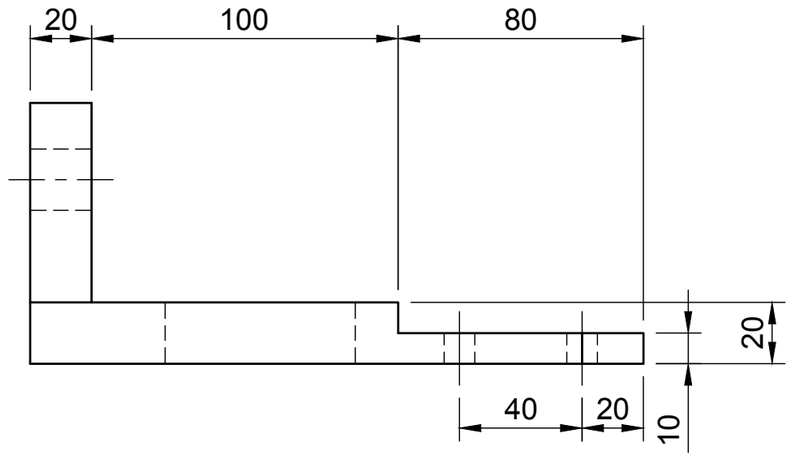

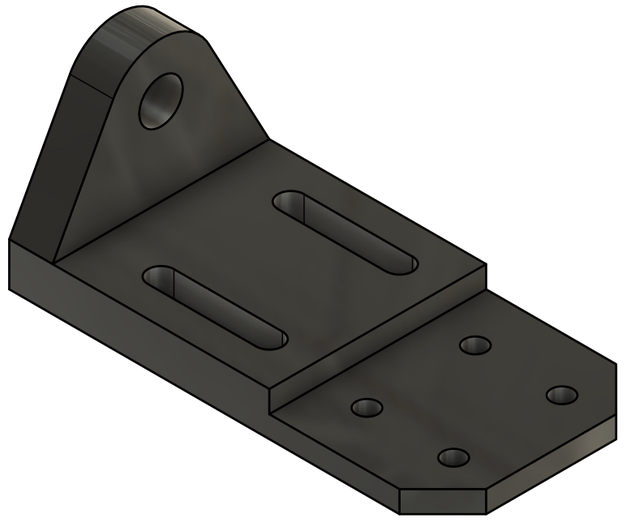

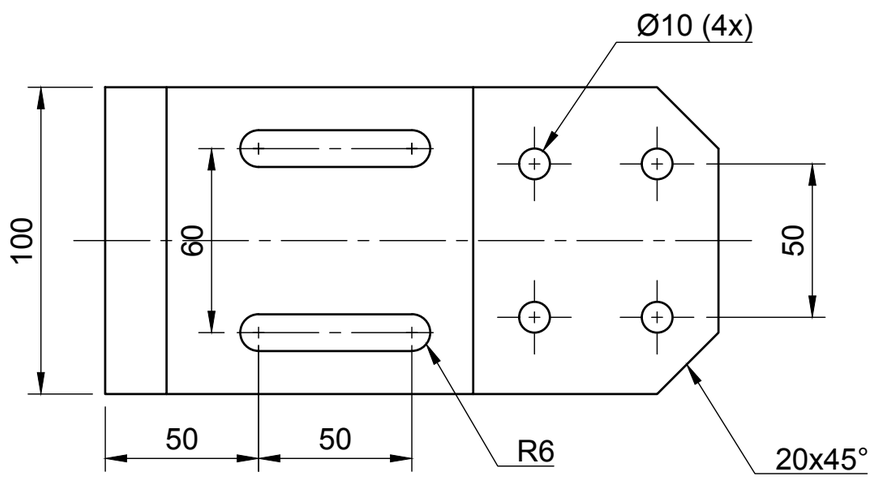

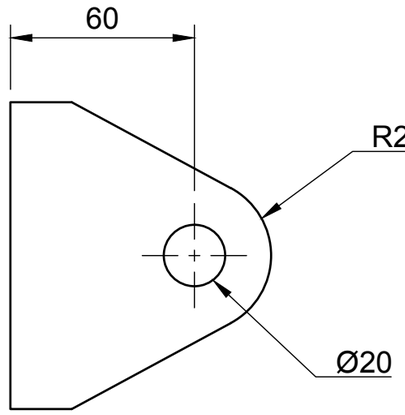

Item	Qty	Part Number	Material	Mass
1	1	B15	Domex 700	2.83 kg

Parts List

General Tolerances		
Weld constr. ISO 5817 Class C	Castings ISO 8062 CT12	Threads ISO 965 6H/6g
Linear and angular dimensions		
Machined with cutting tools (does not include sawing)		ISO 2768-1-m
Machined with non cutting tools (includes sawing)		ISO 2768-1-v
Broken edges and angular dimensions		ISO 2768-1-c

School subject: CAD1/CAD2	Scale: 1:2	Created by: Jorgen Nilsson	Approved by:
PERSTORP TEKNISKA GYMNASIUM		Document type: FUSION 360 Drawing	Approved date:
First angle projection		Title: B15 Modeling exercise	DWG No.: PG-24160
			Rev.: 0 / Date of issue: 2024-04-13 / Sheet: 1/1

This drawing is Perstorp Tekniska Gymnasium property and is protected according to existing law and may not without our approval be copied, imparted anyone or used without authorization

Revision history			
Rev.	Description	Created by	Rev. date

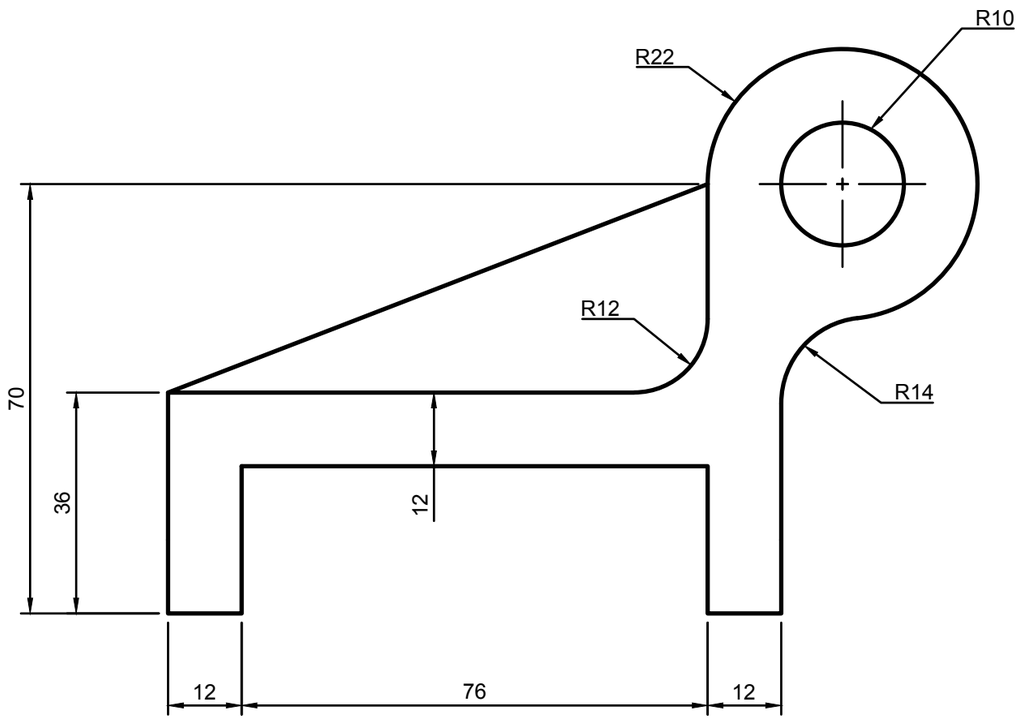

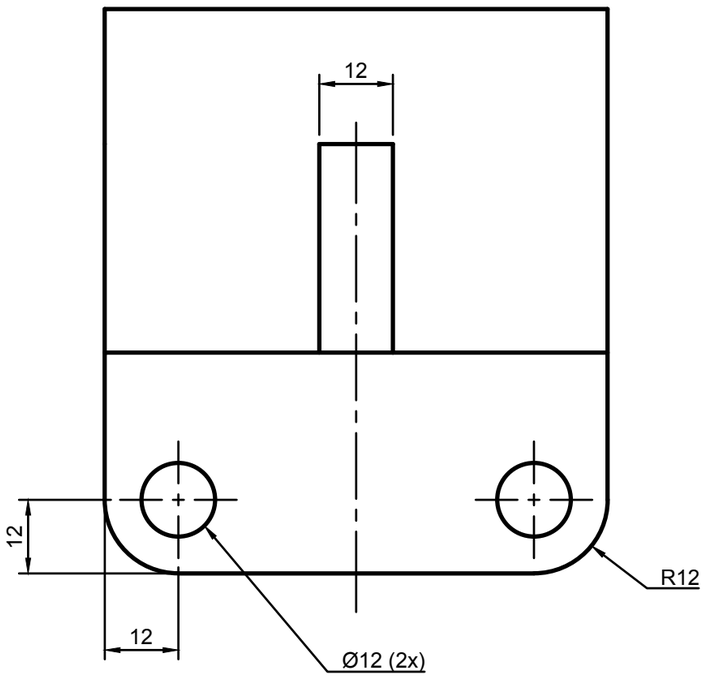

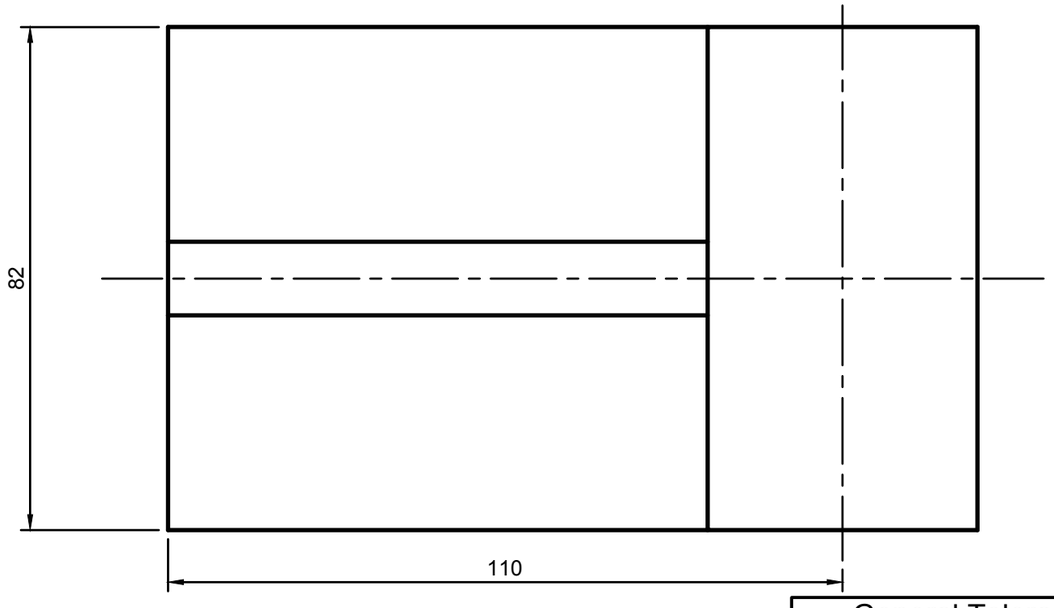

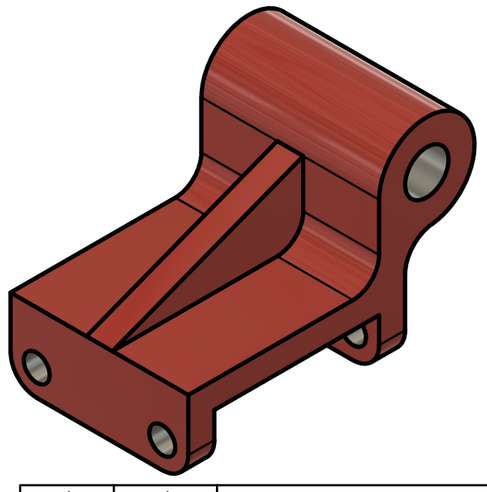

Item	Qty	Part Number	Material	Mass
1	1	B16	S255J2G3	2.21 kg

Parts List

General Tolerances		
Weld constr. ISO 5817 Class C	Castings ISO 8062 CT12	Threads ISO 965 6H/6g
Linear and angular dimensions		
Machined with cutting tools (does not include sawing)	ISO 2768-1-m	
Machined with non cutting tools (includes sawing)	ISO 2768-1-v	
Broken edges and angular dimensions	ISO 2768-1-c	

School subject: CAD1/CAD2	Scale: 1:1	Created by: Jorgen Nilsson	Approved by:
PERSTORP TEKNISKA GYMNASIUM		Document type: FUSION 360 Drawing	Approved date:
First angle projection		Title: B16 Modeling exercise	DWG No.: PG-24164
			Rev.: 0 / Date of issue: 2024-04-13 / Sheet: 1/2

This drawing is Perstorp Tekniska Gymnasium property and is protected according to existing law and may not without our approval be copied, imparted anyone or used without authorization

Revision history			
Rev.	Description	Created by	Rev. date

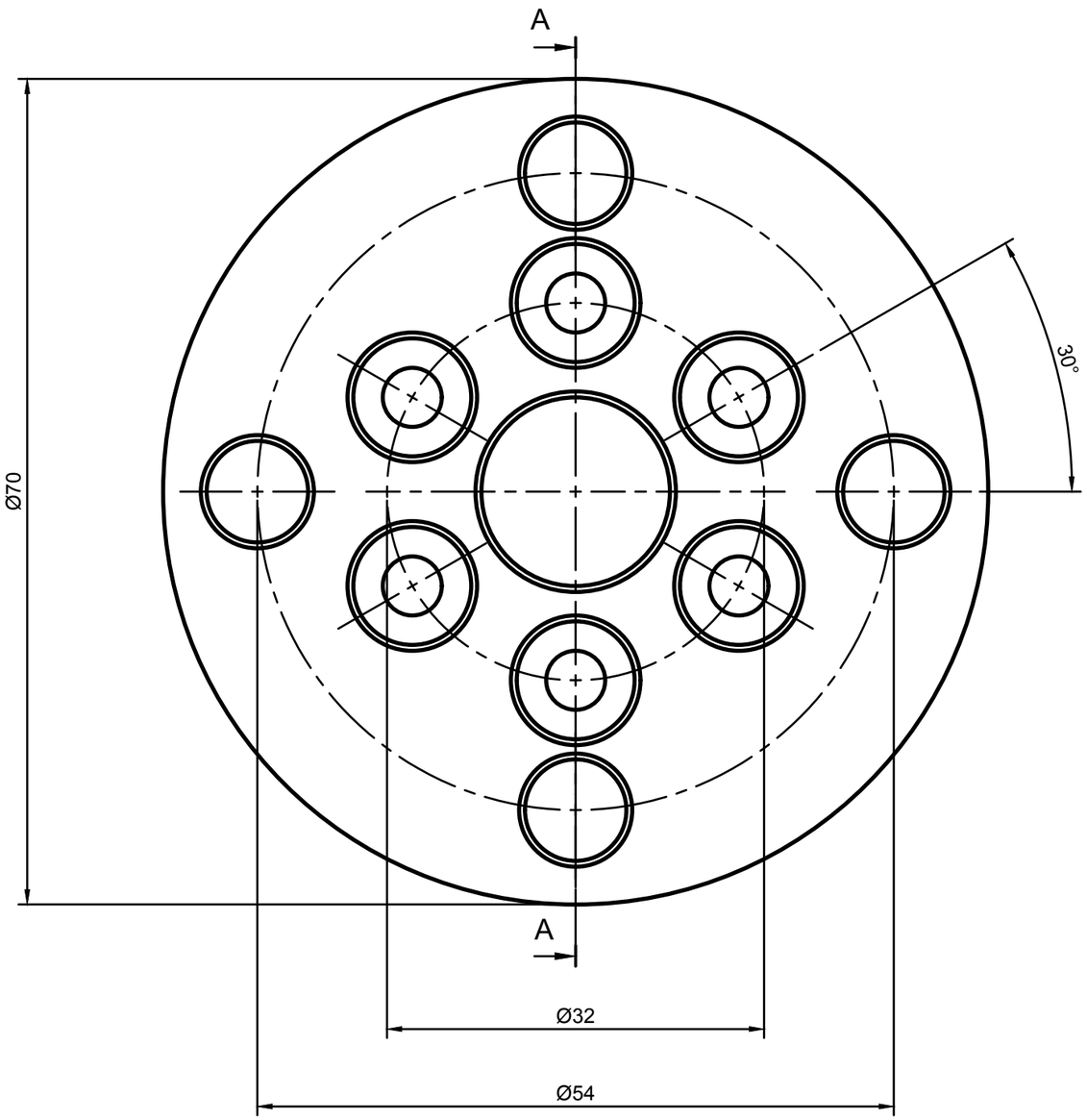

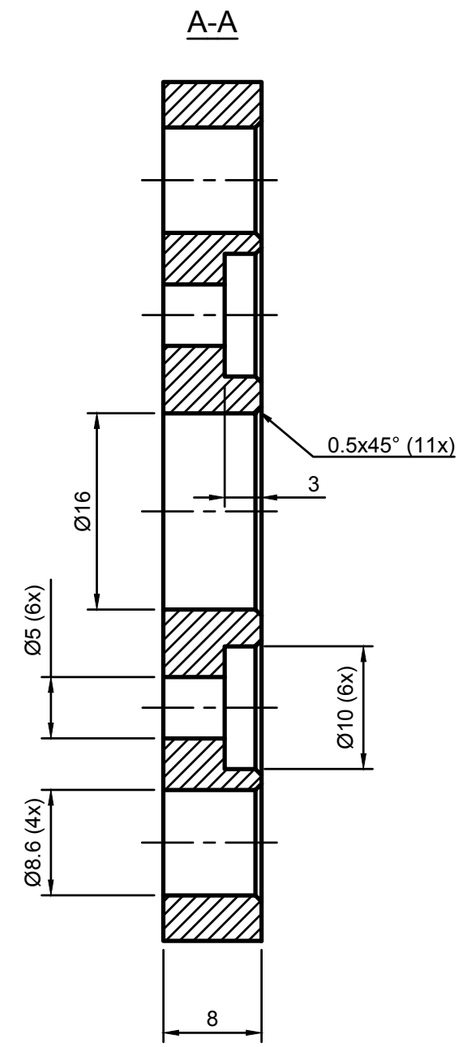

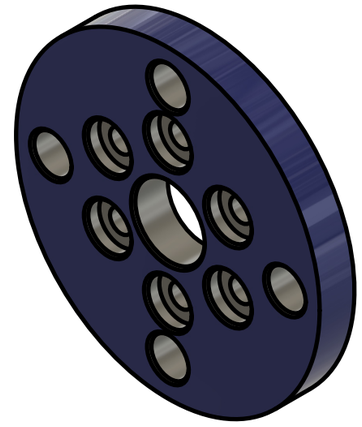

Item	Qty	Part Number	Material	Mass
1	1	B17	Domex 700	0.20 kg

Parts List

General Tolerances		
Weld constr. ISO 5817 Class C	Castings ISO 8062 CT12	Threads ISO 965 6H/6g
Linear and angular dimensions		
Machined with cutting tools (does not include sawing)	ISO 2768-1-m	
Machined with non cutting tools (includes sawing)	ISO 2768-1-v	
Broken edges and angular dimensions	ISO 2768-1-c	

School subject: CAD1/CAD2	Scale: 2:1	Created by: Jorgen Nilsson	Approved by:
PERSTORP TEKNISKA GYMNASIUM		Document type: FUSION 360 Drawing	Approved date:
First angle projection		Title: B17 Modeling exercise	DWG No.: PG-241180
			Rev.: 0 / Date of issue: 2024-03-18 / Sheet: 1/2

This drawing is Perstorp Tekniska Gymnasium property and is protected according to existing law and may not without our approval be copied, imparted anyone or used without authorization

Revision history			
Rev.	Description	Created by	Rev. date

B (5:1)

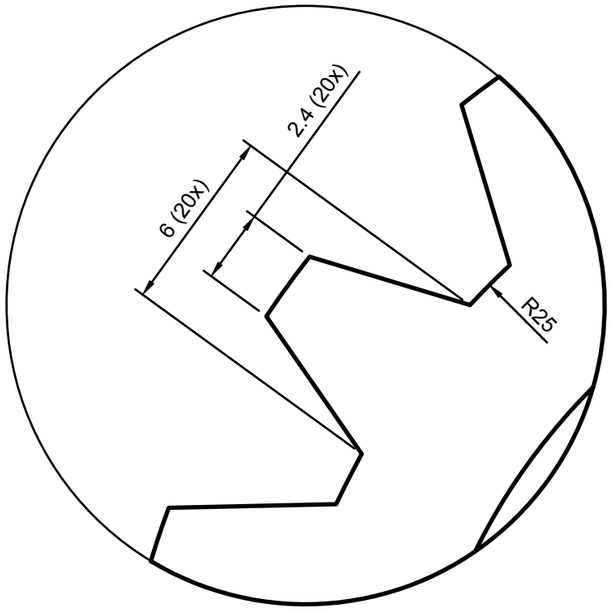

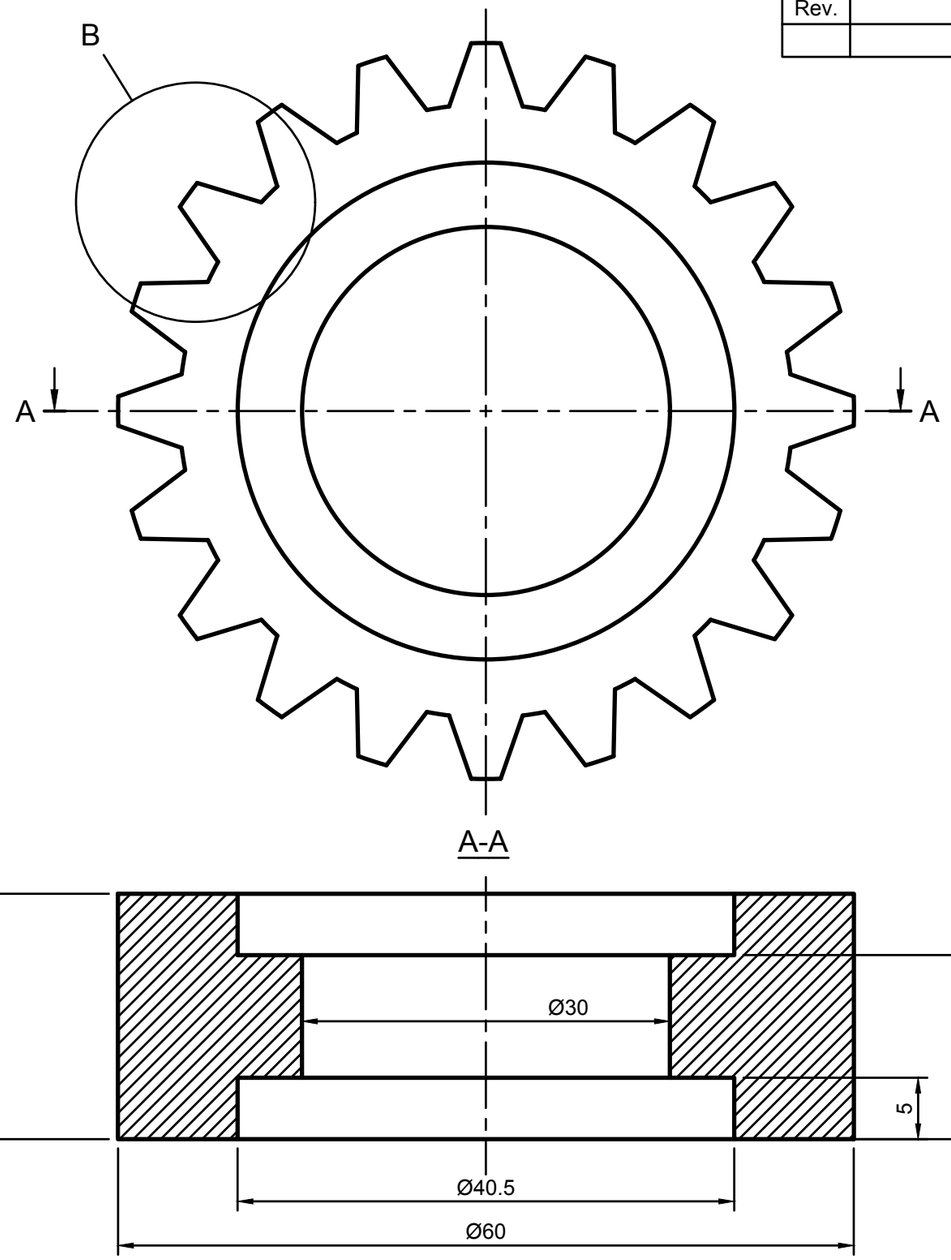

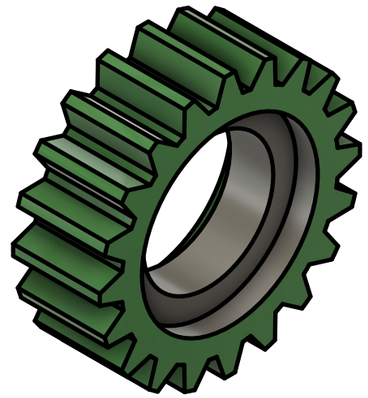

A-A

Item	Qty	Part Number	Material	Mass
1	1	B18	34NiCrMo6	0.22 kg

Parts List

General Tolerances		
Weld constr. ISO 5817 Class C	Castings ISO 8062 CT12	Threads ISO 965 6H/6g
Linear and angular dimensions		
Machined with cutting tools (does not include sawing)	ISO 2768-1-m	
Machined with non cutting tools (includes sawing)	ISO 2768-1-v	
Broken edges and angular dimensions	ISO 2768-1-c	

School subject: CAD1/CAD2	Scale: 2:1	Created by: Jorgen Nilsson	Approved by:
PERSTORP TEKNISKA GYMNASIUM		Document type: FUSION 360 Drawing	Approved date:
First angle projection		Title: B18 Modeling exercise	DWG No.: PG-241129
			Rev.: 0 / Date of issue: 2024-03-21 / Sheet: 1/1

This drawing is Perstorp Tekniska Gymnasium property and is protected according to existing law and may not without our approval be copied, imparted anyone or used without authorization

Revision history			
Rev.	Description	Created by	Rev. date

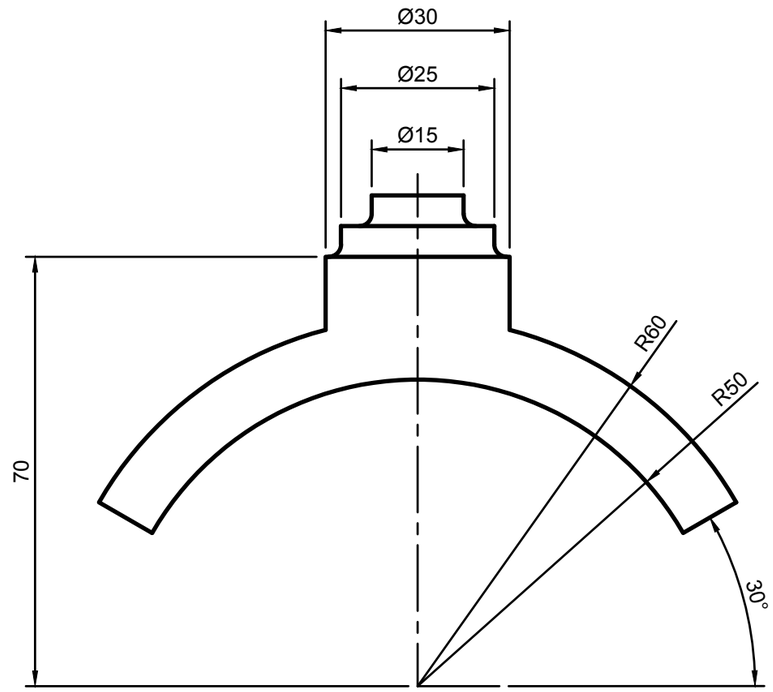

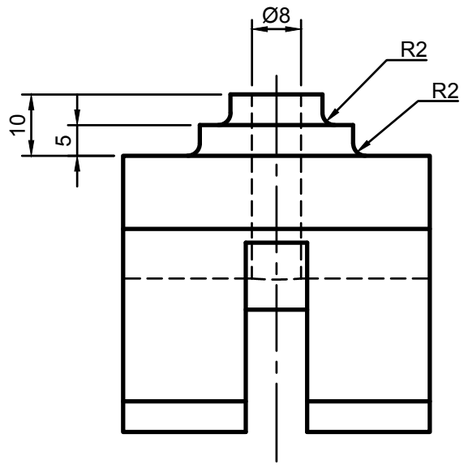

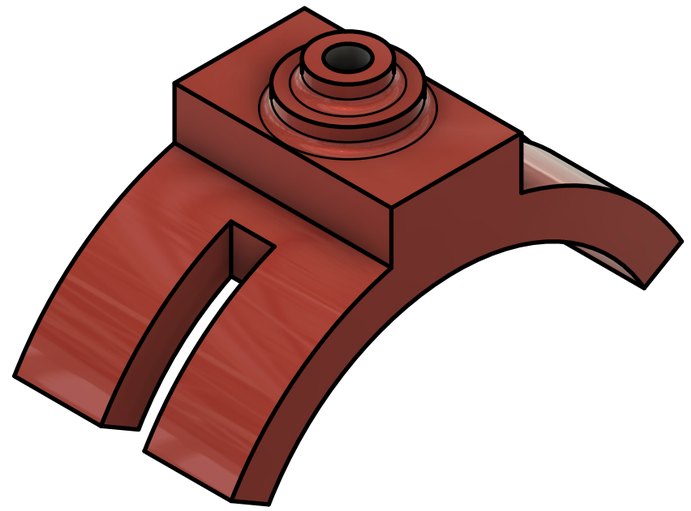

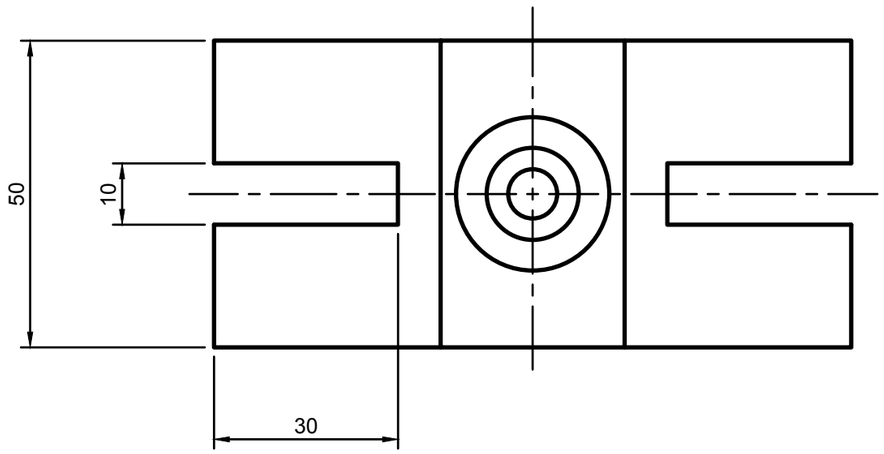

Item	Qty	Part Number	Material	Mass
1	1	B19	Plastic PLA	88.34 g

Parts List

General Tolerances		
Weld constr. ISO 5817 Class C	Castings ISO 8062 CT12	Threads ISO 965 6H/6g
Linear and angular dimensions		
Machined with cutting tools (does not include sawing)	ISO 2768-1-m	
Machined with non cutting tools (includes sawing)	ISO 2768-1-v	
Broken edges and angular dimensions	ISO 2768-1-c	

School subject: CAD1/CAD2	Scale: 1:1	Created by: Jorgen Nilsson	Approved by:
PERSTORP TEKNISKA GYMNASIUM		Document type: FUSION 360 Drawing	Approved date:
First angle projection		Title: B19 Modeling exercise	DWG No.: PG-241290
			Rev.: 0 / Date of issue: 2024-04-28 / Sheet: 1/1

This drawing is Perstorp Tekniska Gymnasium property and is protected according to existing law and may not without our approval be copied, imparted anyone or used without authorization

Revision history			
Rev.	Description	Created by	Rev. date

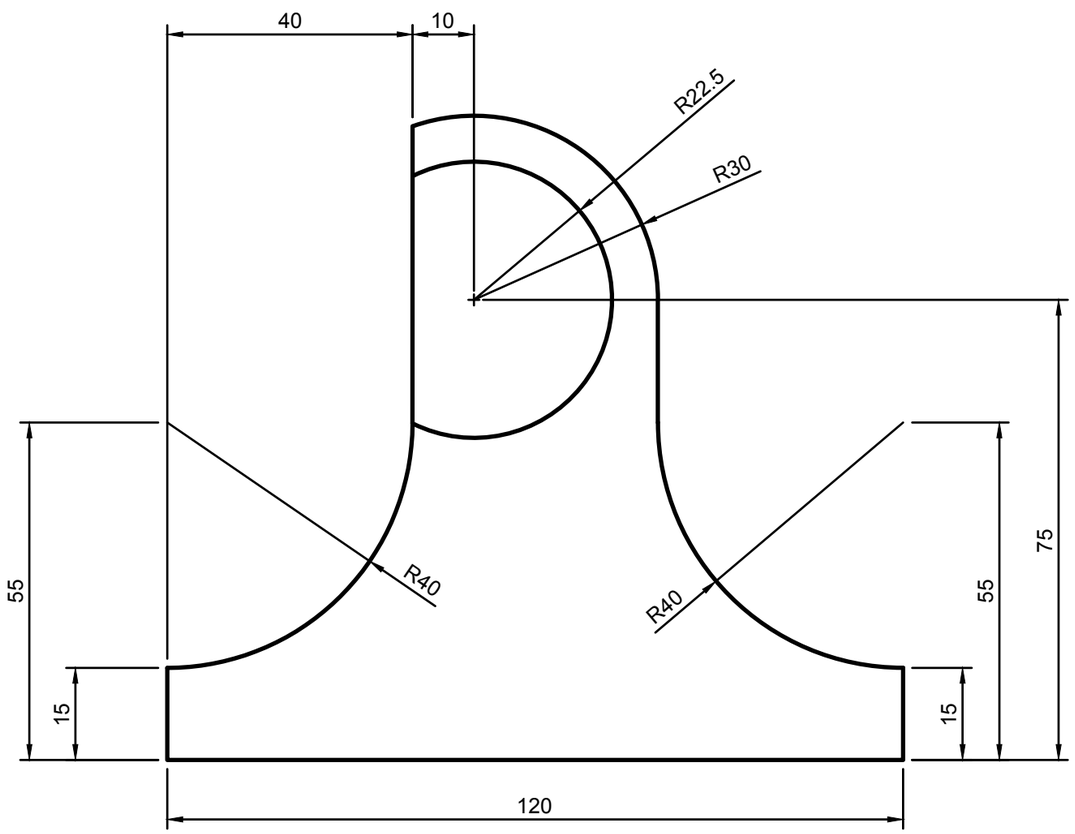

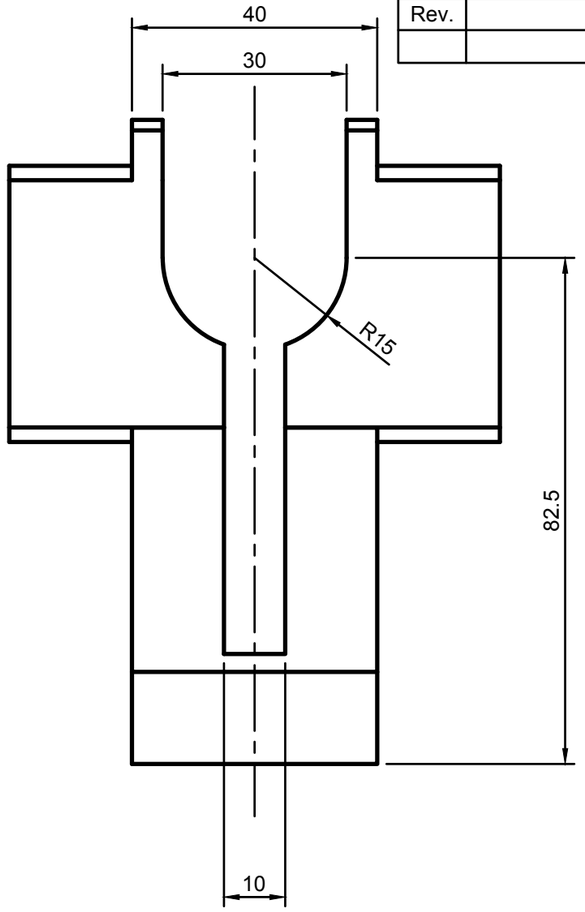

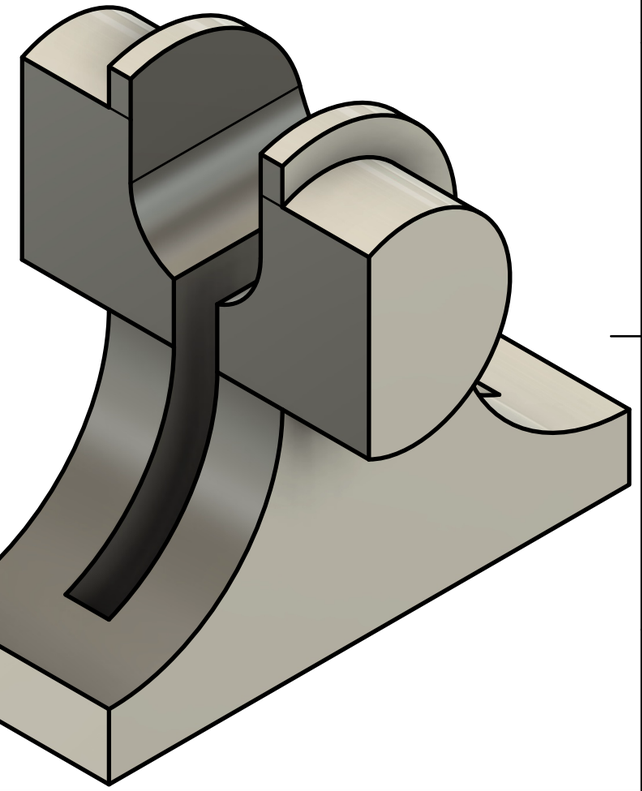

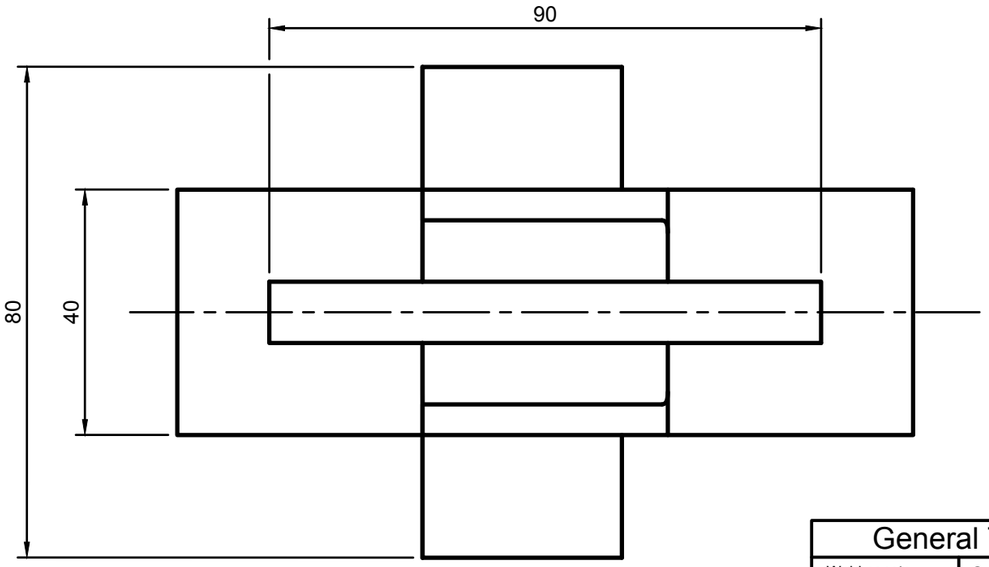

Item	Qty	Part Number	Material	Mass
1	1	B20	S255J2G3	1.64 kg

Parts List

General Tolerances		
Weld constr. ISO 5817 Class C	Castings ISO 8062 CT12	Threads ISO 965 6H/6g
Linear and angular dimensions		
Machined with cutting tools (does not include sawing)	ISO 2768-1-m	
Machined with non cutting tools (includes sawing)	ISO 2768-1-v	
Broken edges and angular dimensions	ISO 2768-1-c	

School subject: CAD1/CAD2	Scale: 1:1	Created by: Jorgen Nilsson	Approved by:
PERSTORP TEKNISKA GYMNASIUM		Document type: FUSION 360 Drawing	Approved date:
First angle projection		Title: B20 Modeling exercise	DWG No.: PG-241296
			Rev.: 0 / Date of issue: 2024-03-06 / Sheet: 1/1

This drawing is Perstorp Tekniska Gymnasium property and is protected according to existing law and may not without our approval be copied, imparted anyone or used without authorization

Revision history			
Rev.	Description	Created by	Rev. date

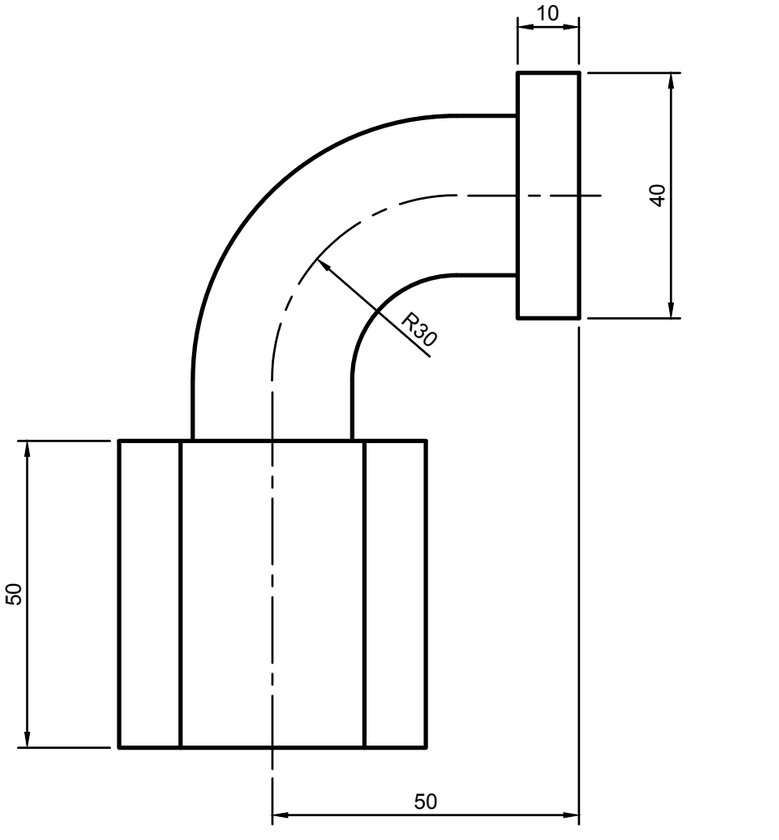

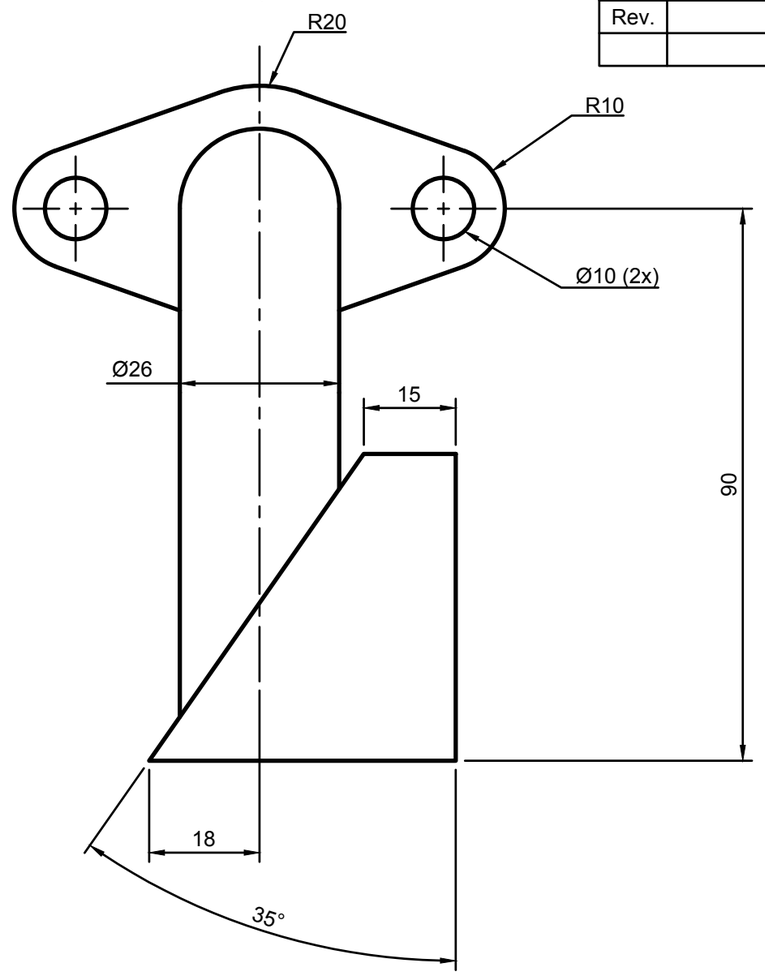

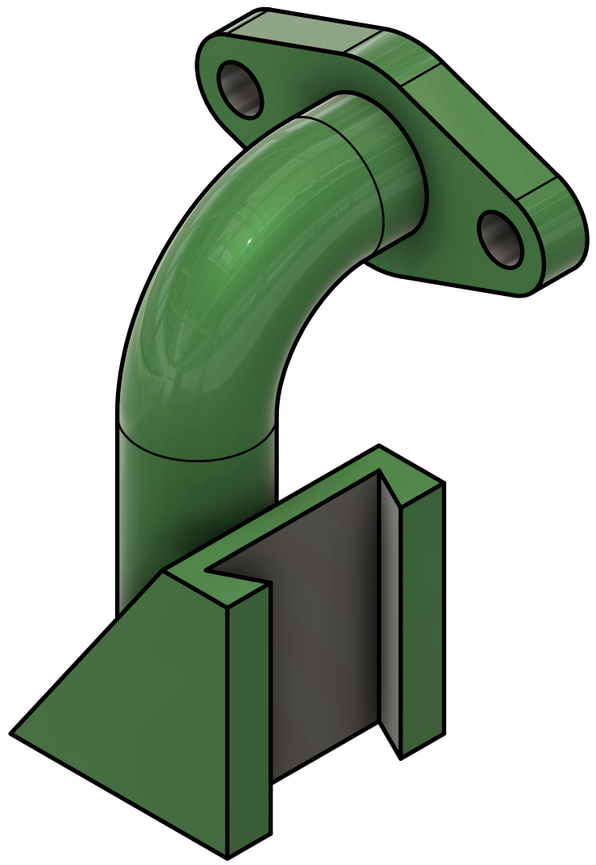

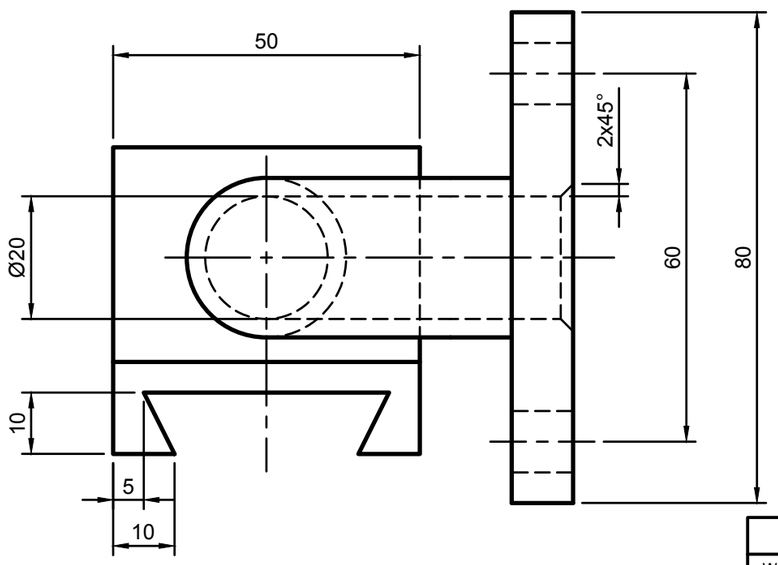

Item	Qty	Part Number	Material	Mass
1	1	B21	S355J2G3	0.73 kg

Parts List

General Tolerances		
Weld constr. ISO 5817 Class C	Castings ISO 8062 CT12	Threads ISO 965 6H/6g
Linear and angular dimensions		
Machined with cutting tools (does not include sawing)		ISO 2768-1-m
Machined with non cutting tools (includes sawing)		ISO 2768-1-v
Broken edges and angular dimensions		ISO 2768-1-c

School subject: CAD1/CAD2	Scale: 1:1	Created by: Jorgen Nilsson	Approved by:
PERSTORP TEKNISKA GYMNASIUM		Document type: FUSION 360 Drawing	Approved date:
First angle projection		Title: B21 Modeling exercise	DWG No.: PG-241297
			Rev.: 0 / Date of issue: 2024-04-28 / Sheet: 1/1

This drawing is Perstorp Tekniska Gymnasium property and is protected according to existing law and may not without our approval be copied, imparted anyone or used without authorization

Revision history			
Rev.	Description	Created by	Rev. date

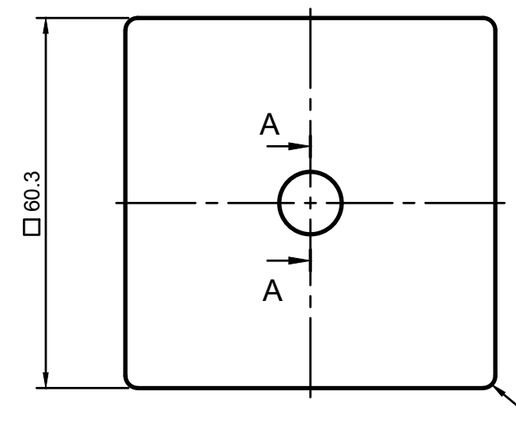

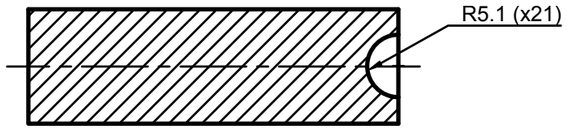

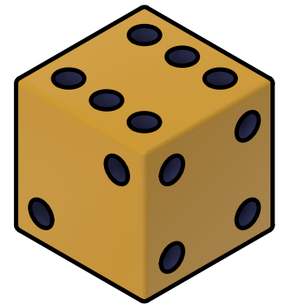

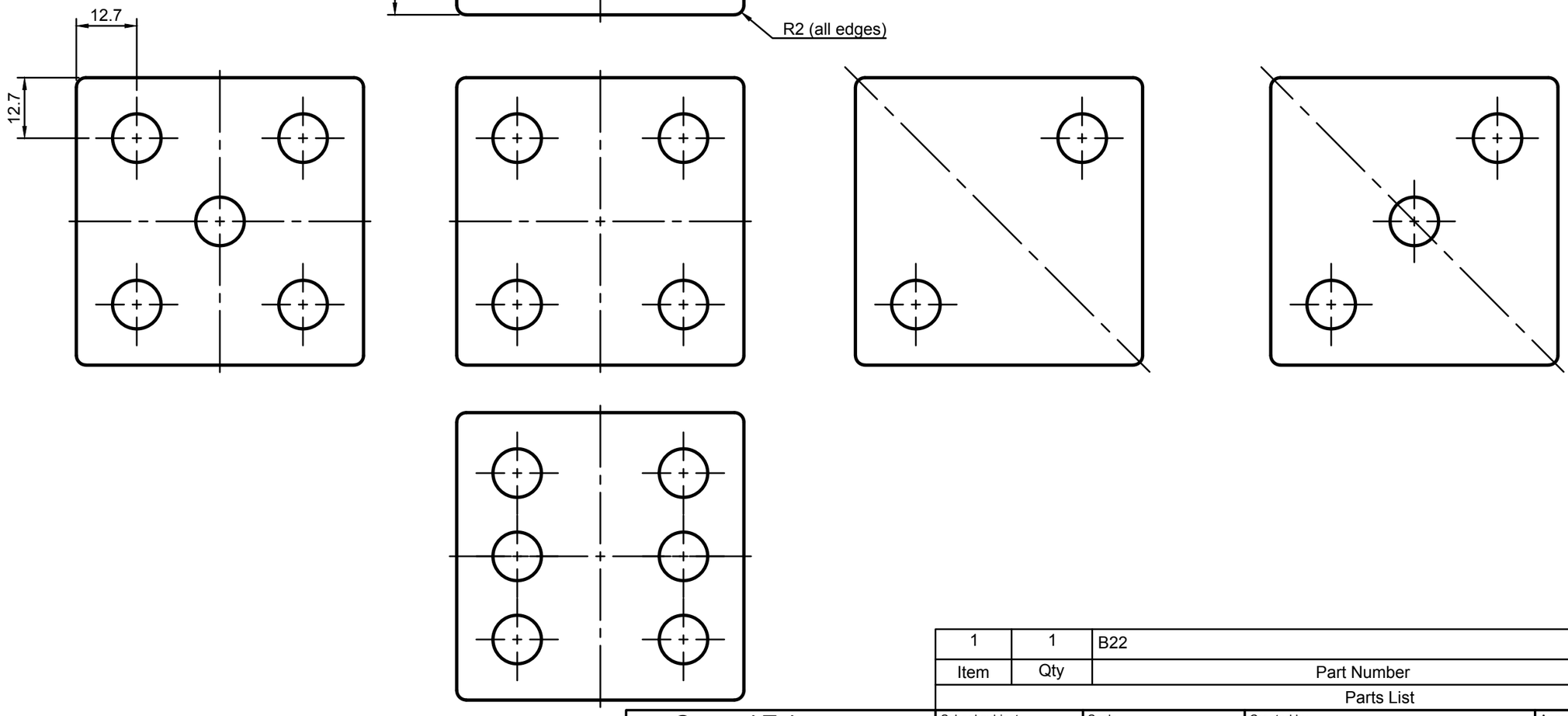

Item	Qty	Part Number	Material	Mass
1	1	B22	S255J2G3	1.67 kg

Parts List

General Tolerances		
Weld constr. ISO 5817 Class C	Castings ISO 8062 CT12	Threads ISO 965 6H/6g
Linear and angular dimensions		
Machined with cutting tools (does not include sawing)	ISO 2768-1-m	
Machined with non cutting tools (includes sawing)	ISO 2768-1-v	
Broken edges and angular dimensions	ISO 2768-1-c	

School subject: CAD1/CAD2	Scale: 1:1	Created by: Jorgen Nilsson	Approved by:
PERSTORP TEKNISKA GYMNASIUM		Document type: FUSION 360 Drawing	Approved date:
First angle projection		Title: B22 Modeling exercise	DWG No.: PG-24133
			Rev.: 0 / Date of issue: 2024-04-30 / Sheet: 1/1

This drawing is Perstorp Tekniska Gymnasium property and is protected according to existing law and may not without our approval be copied, imparted anyone or used without authorization

Revision history			
Rev.	Description	Created by	Rev. date

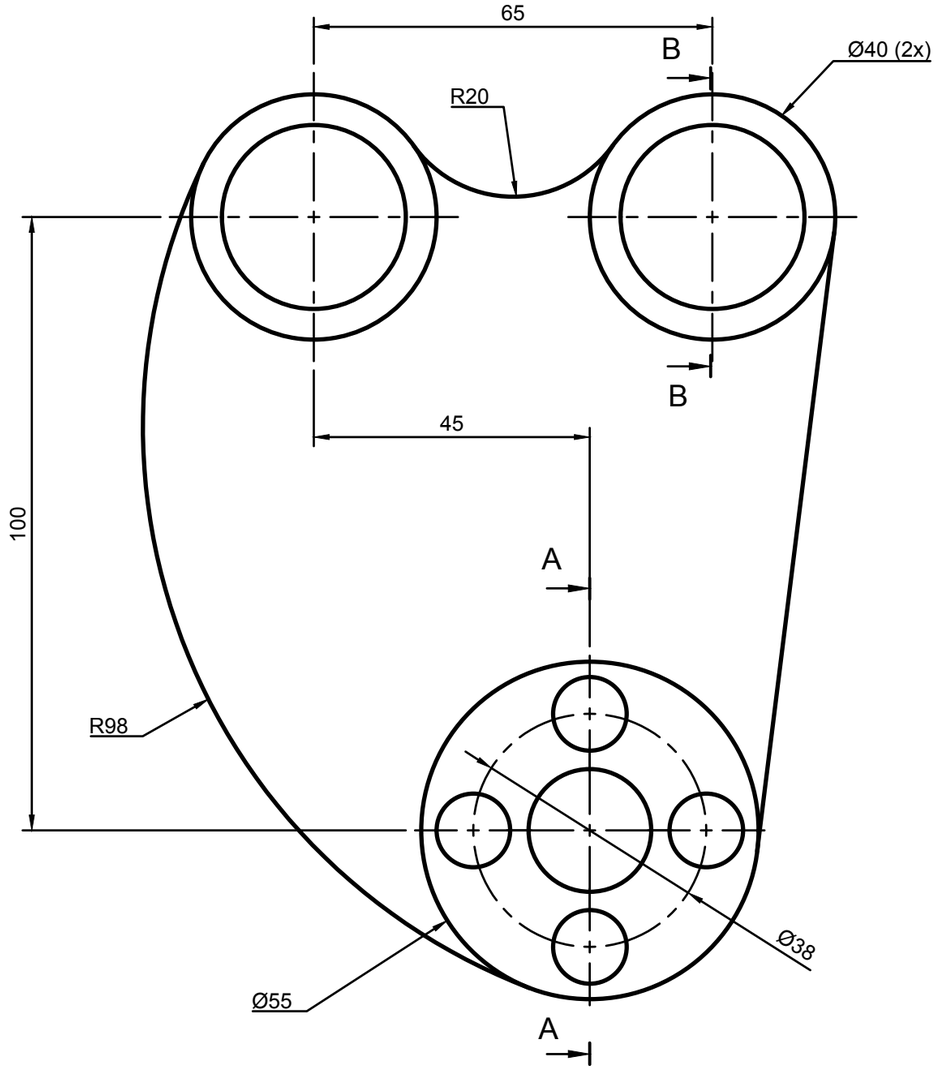

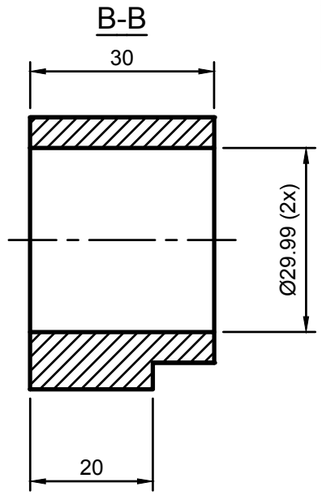

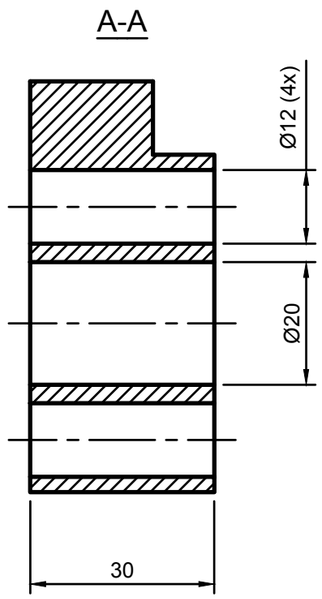

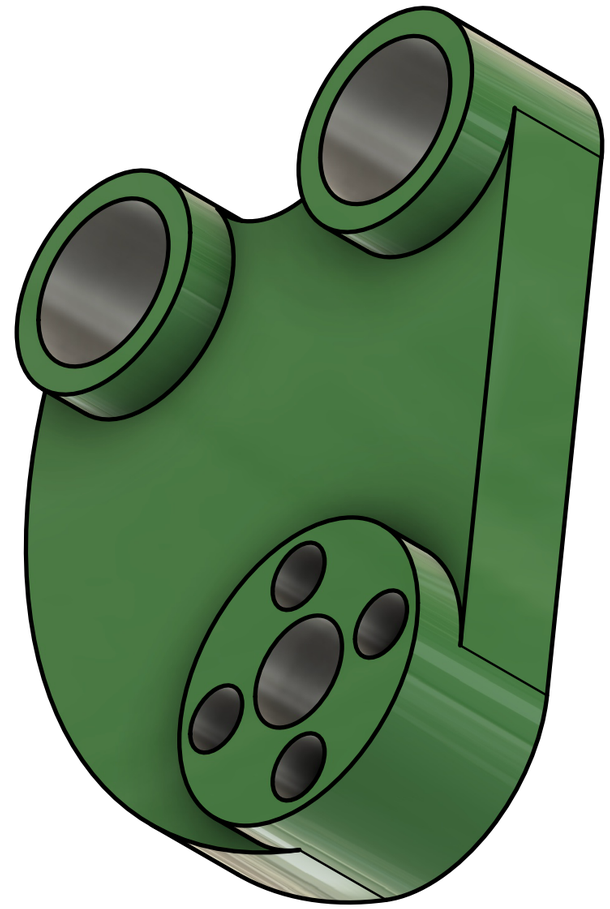

Item	Qty	Part Number	Material	Mass
1	1	B23	S355J2G3	1.90 kg

Parts List

General Tolerances		
Weld constr. ISO 5817 Class C	Castings ISO 8062 CT12	Threads ISO 965 6H/6g
Linear and angular dimensions		
Machined with cutting tools (does not include sawing)	ISO 2768-1-m	
Machined with non cutting tools (includes sawing)	ISO 2768-1-v	
Broken edges and angular dimensions	ISO 2768-1-c	

School subject: CAD1/CAD2

Scale: 1:1

PERSTORP TEKNISKA GYMNASIUM

First angle projection

Created by: Jorgen Nilsson

Document type: FUSION 360 Drawing

Title: B23 Modeling exercise

Approved by:

Approved date:

DWG No.: PG-241183

Rev.	Date of issue	Sheet
0	2024-04-10	1/1

This drawing is Perstorp Tekniska Gymnasium property and is protected according to existing law and may not without our approval be copied, imparted anyone or used without authorization

Revision History			
Rev.	Description	Created by	Rev. date

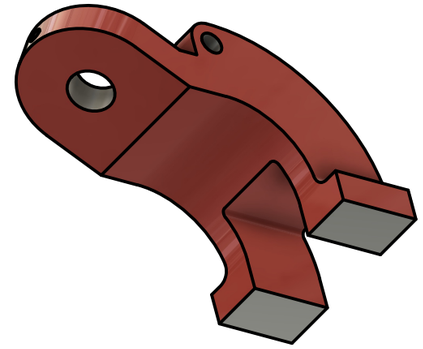

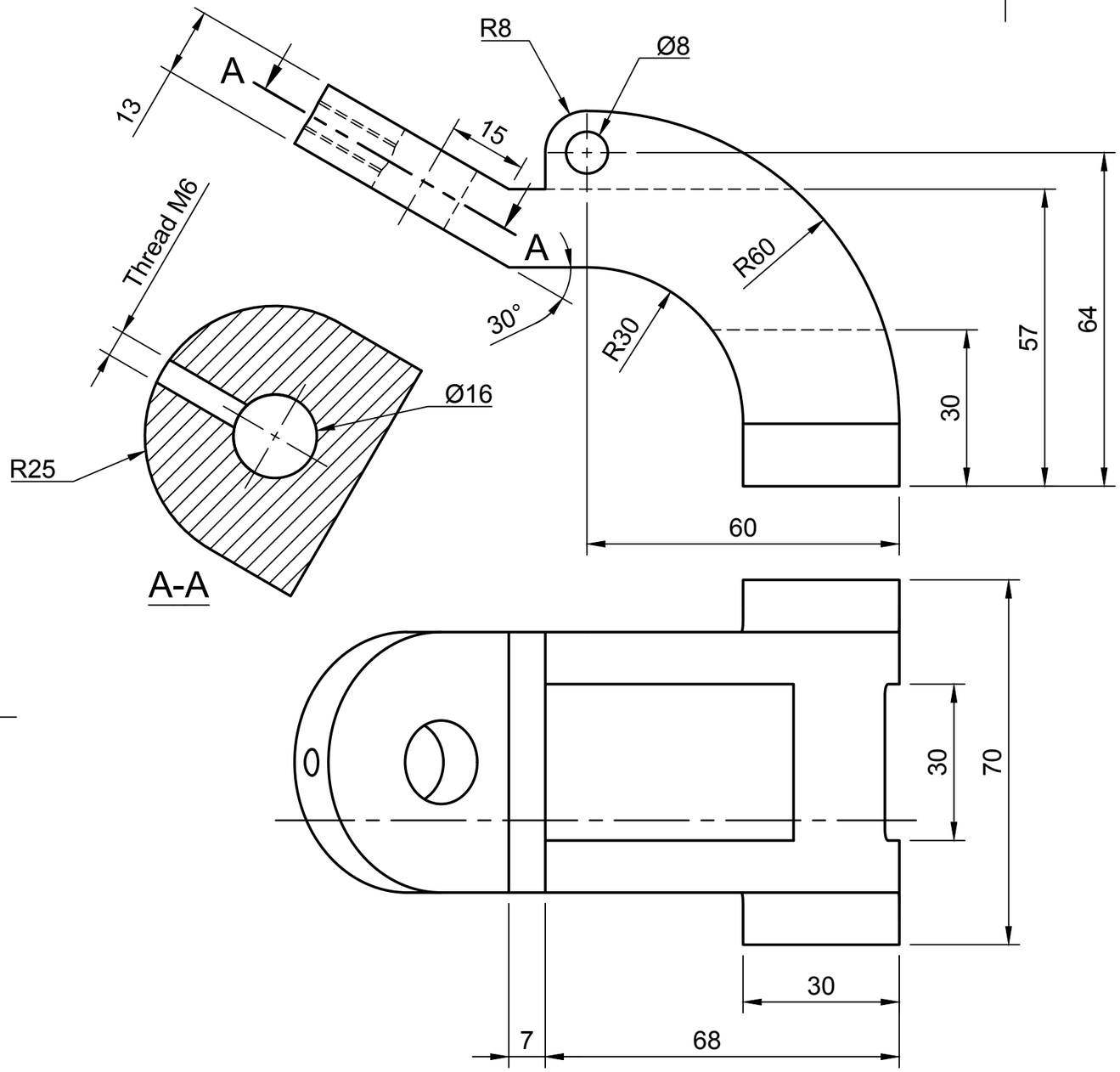

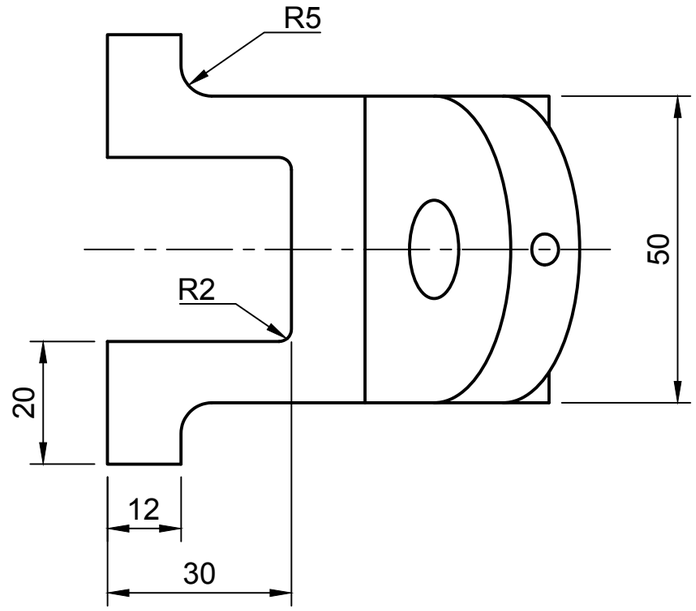

Item	Qty	Part Number	Material	Mass
1	1	B24	S355J2G3	0.99 kg

Parts List

General Tolerances		
Weld constr. ISO 5817 Class C	Castings ISO 8062 CT12	Threads ISO 965 6H/6g
Linear and angular dimensions		
Machined with cutting tools (does not include sawing)	ISO 2768-1-m	
Machined with non cutting tools (includes sawing)	ISO 2768-1-v	
Broken edges and angular dimensions	ISO 2768-1-c	

School subject: CAD1/CAD2	Scale: 1:1	Created by: Jorgen Nilsson	Approved by:
PERSTORP TEKNISKA GYMNASIUM		Document type: FUSION 360 Drawing	Approved date:
First angle projection		Title: B24 Modeling exercise	DWG No.: PG-24159
			Rev.: 0 / Date of issue: 2024-04-13 / Sheet: 1/1

This drawing is Perstorp Tekniska Gymnasium property and is protected according to existing law and may not without our approval be copied, imparted anyone or used without authorization

Revision history			
Rev.	Description	Created by	Rev. date

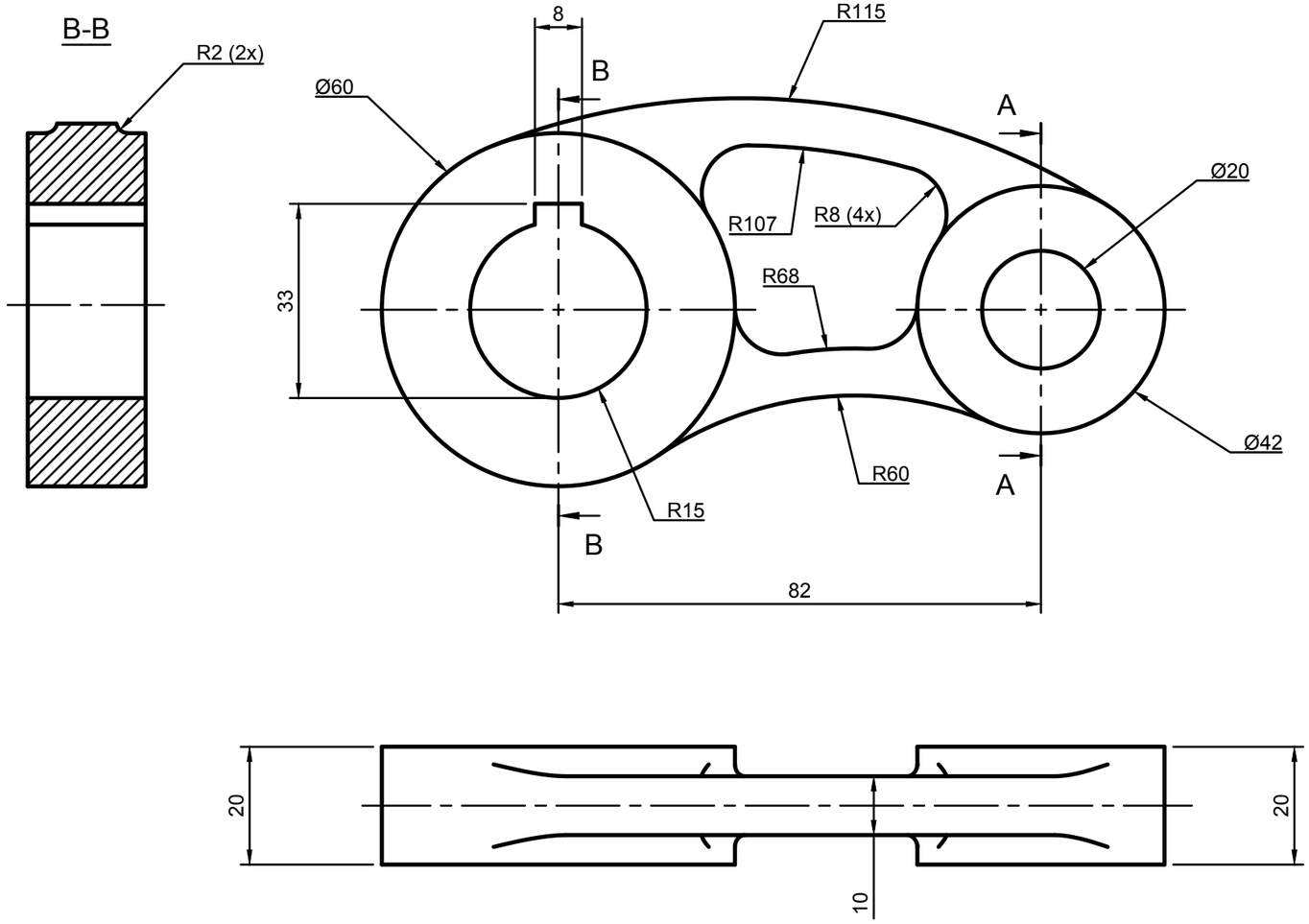

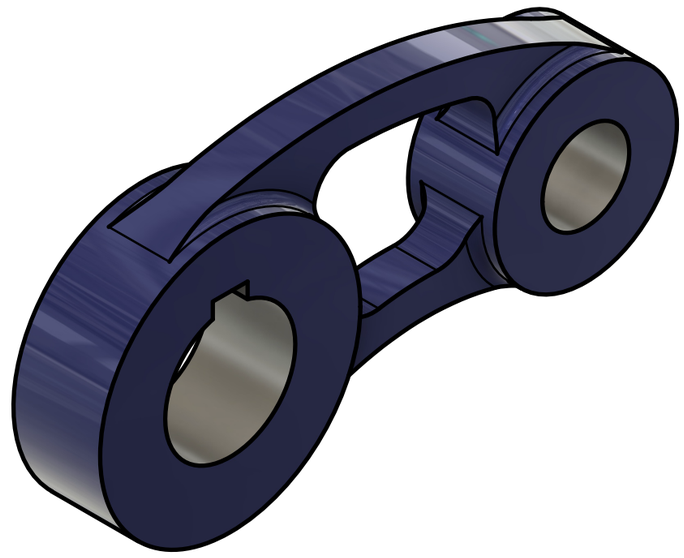

Item	Qty	Part Number	Material	Mass
1	1	B25	Plastic ABS	0.10 kg

Parts List

General Tolerances		
Weld constr. ISO 5817 Class C	Castings ISO 8062 CT12	Threads ISO 965 6H/6g
Linear and angular dimensions		
Machined with cutting tools (does not include sawing)	ISO 2768-1-m	
Machined with non cutting tools (includes sawing)	ISO 2768-1-v	
Broken edges and angular dimensions	ISO 2768-1-c	

School subject: CAD1/CAD2	Scale: 1:1	Created by: Jorgen Nilsson	Approved by:
PERSTORP TEKNISKA GYMNASIUM		Document type: FUSION 360 Drawing	Approved date:
First angle projection		Title: B25 Modeling exercise	DWG No.: PG-24162
			Rev.: 0 / Date of issue: 2024-04-13 / Sheet: 1/1

This drawing is Perstorp Tekniska Gymnasium property and is protected according to existing law and may not without our approval be copied, imparted anyone or used without authorization

Revision history			
Rev.	Description	Created by	Rev. date

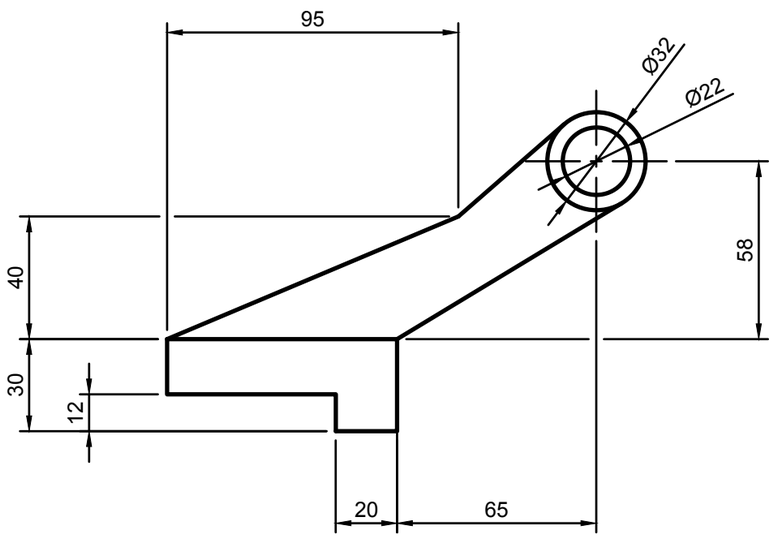

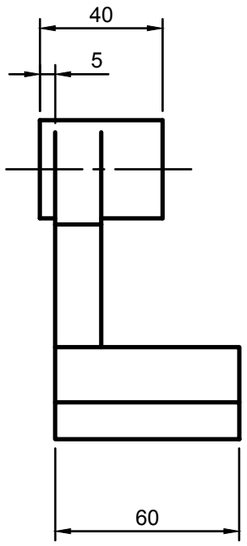

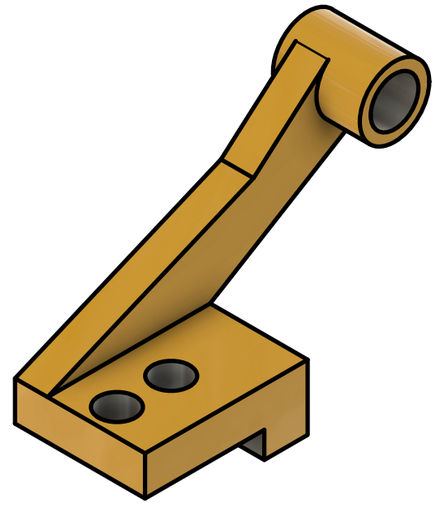

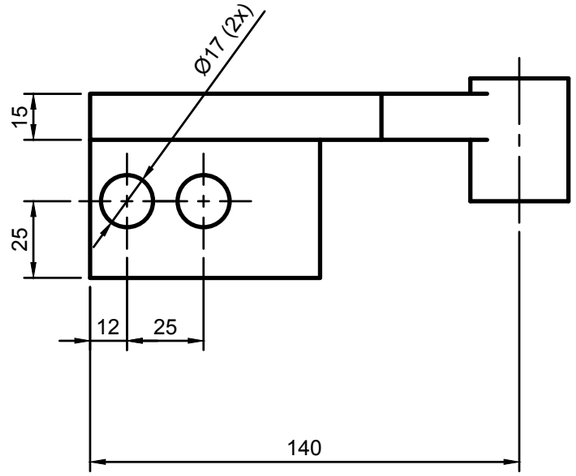

Item	Qty	Part Number	Material	Mass
1	1	B26	Stainless 1.4401	1.16 kg

Parts List

General Tolerances		
Weld constr. ISO 5817 Class C	Castings ISO 8062 CT12	Threads ISO 965 6H/6g
Linear and angular dimensions		
Machined with cutting tools (does not include sawing)	ISO 2768-1-m	
Machined with non cutting tools (includes sawing)	ISO 2768-1-v	
Broken edges and angular dimensions	ISO 2768-1-c	

School subject: CAD1/CAD2	Scale: 1:2	Created by: Jorgen Nilsson	Approved by:
PERSTORP TEKNISKA GYMNASIUM		Document type: FUSION 360 Drawing	Approved date:
First angle projection		Title: B26 Modeling exercise	DWG No.: PG-24177
			Rev.: 0 / Date of issue: 2024-04-24 / Sheet: 1/1

This drawing is Perstorp Tekniska Gymnasium property and is protected according to existing law and may not without our approval be copied, imparted anyone or used without authorization

Revision history			
Rev.	Description	Created by	Rev. date

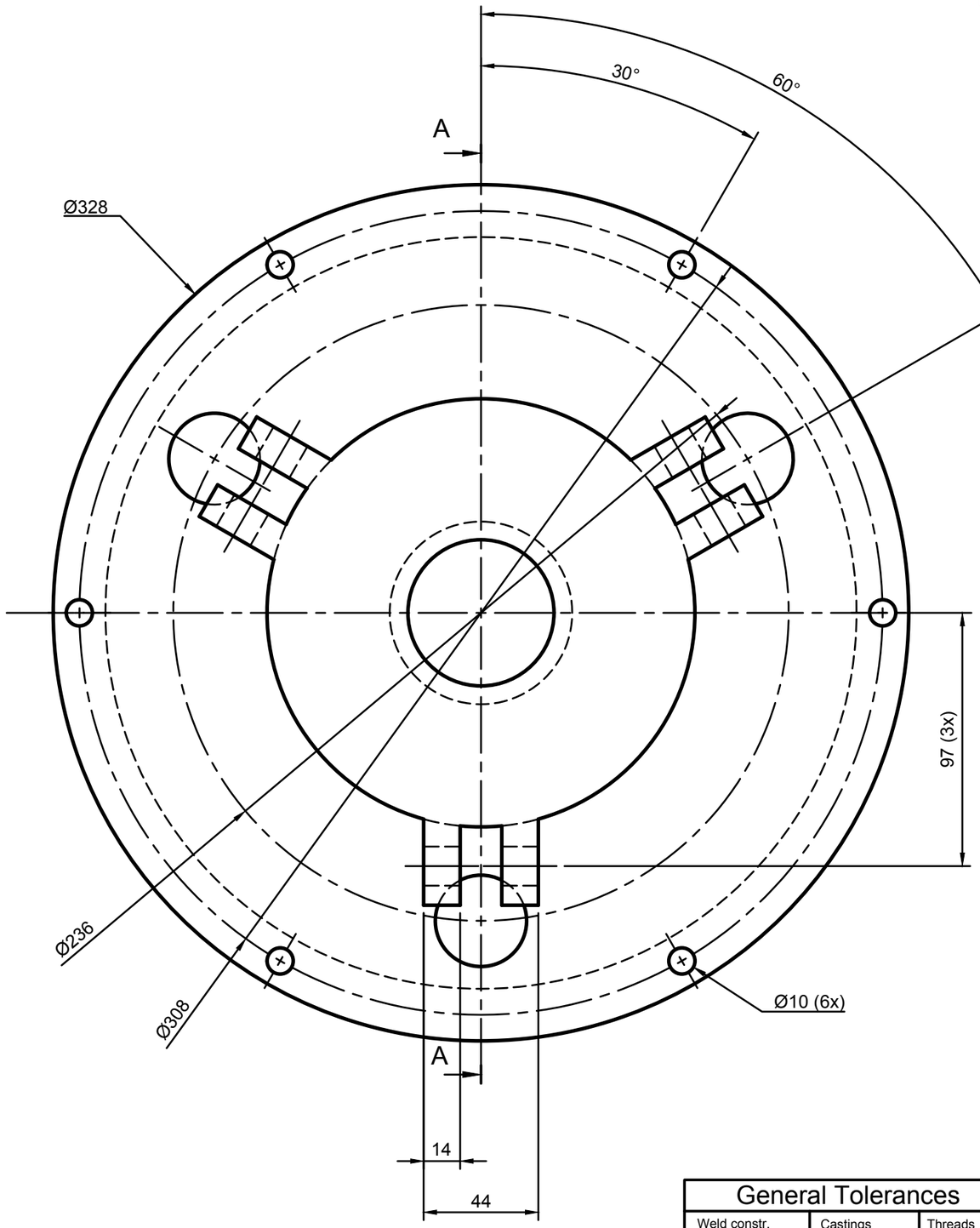

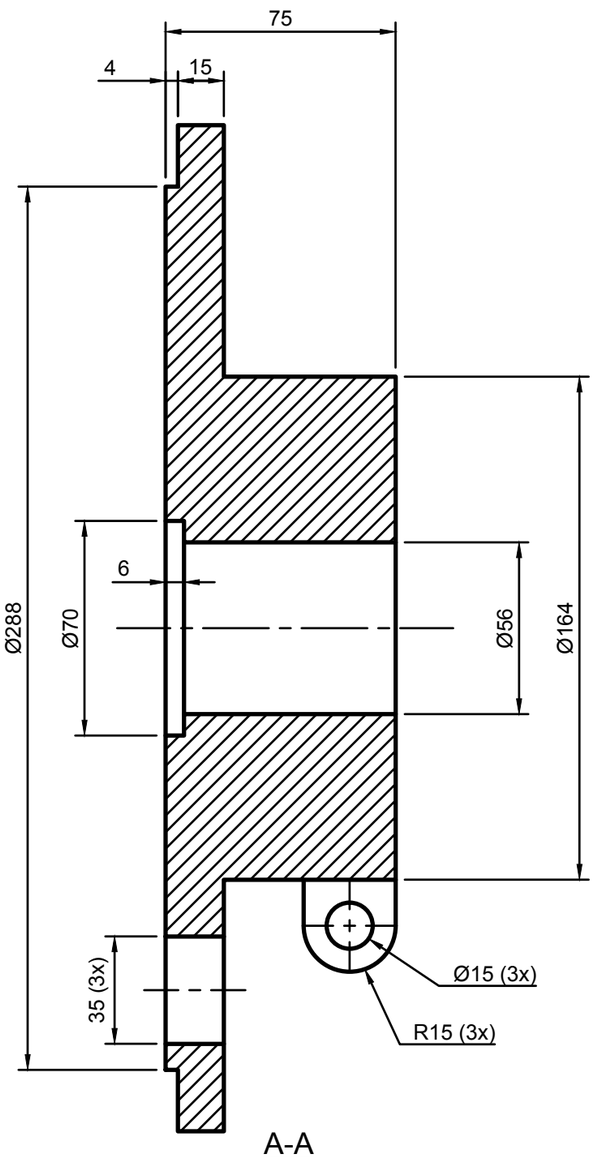

A-A

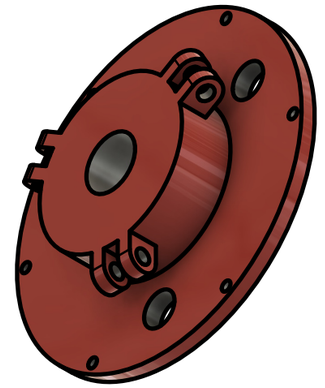

Item	Qty	Part Number	Material	Mass
1	1	B27	S355J2G3	19.72 kg

Parts List

General Tolerances		
Weld constr. ISO 5817 Class C	Castings ISO 8062 CT12	Threads ISO 965 6H/6g
Linear and angular dimensions		
Machined with cutting tools (does not include sawing)	ISO 2768-1-m	
Machined with non cutting tools (includes sawing)	ISO 2768-1-v	
Broken edges and angular dimensions	ISO 2768-1-c	

School subject: CAD1/CAD2	Scale: 1:5	Created by: Jorgen Nilsson	Approved by:
PERSTORP TEKNISKA GYMNASIUM		Document type: FUSION 360 Drawing	Approved date:
First angle projection		Title: B27 Modeling exercise	DWG No.: PG-242106
			Rev.: 0 / Date of issue: 2024-04-08 / Sheet: 1/1

This drawing is Perstorp Tekniska Gymnasium property and is protected according to existing law and may not without our approval be copied, imparted anyone or used without authorization

Revision history			
Rev.	Description	Created by	Rev. date

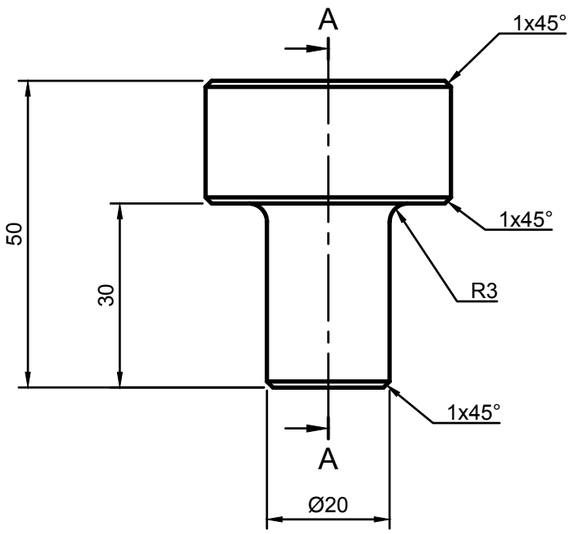

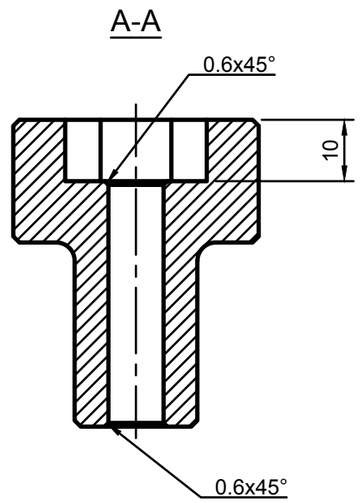

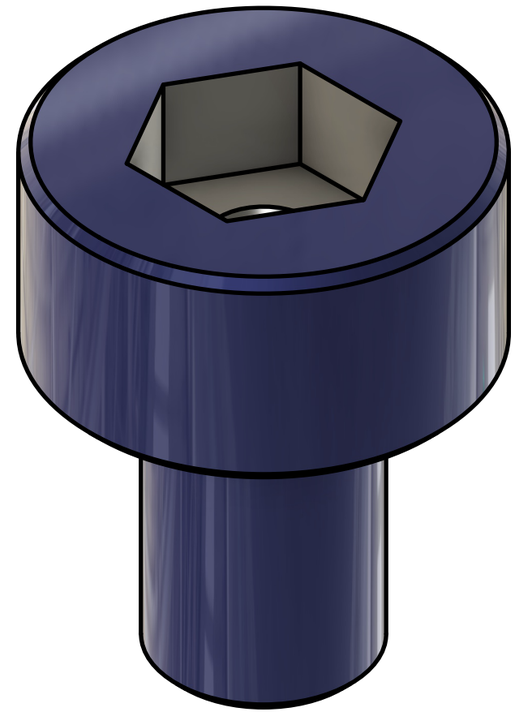

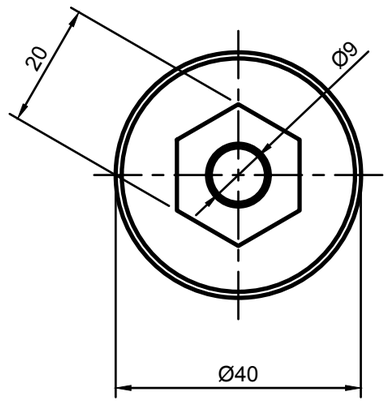

Item	Qty	Part Number	Material	Mass
1	1	B28	34CrMoNi6	0.22 kg

Parts List

General Tolerances		
Weld constr. ISO 5817 Class C	Castings ISO 8062 CT12	Threads ISO 965 6H/6g
Linear and angular dimensions		
Machined with cutting tools (does not include sawing)		ISO 2768-1-m
Machined with non cutting tools (includes sawing)		ISO 2768-1-v
Broken edges and angular dimensions		ISO 2768-1-c

School subject: CAD1/CAD2	Scale: 1:1	Created by: Jorgen Nilsson	Approved by:
PERSTORP TEKNISKA GYMNASIUM		Document type: FUSION 360 Drawing	Approved date:
First angle projection		Title: B28 Modeling exercise	DWG No.: PG-241182
			Rev.: 0 / Date of issue: 2024-03-18 / Sheet: 1/1

This drawing is Perstorp Tekniska Gymnasium property and is protected according to existing law and may not without our approval be copied, imparted anyone or used without authorization

Revision history			
Rev.	Description	Created by	Rev. date

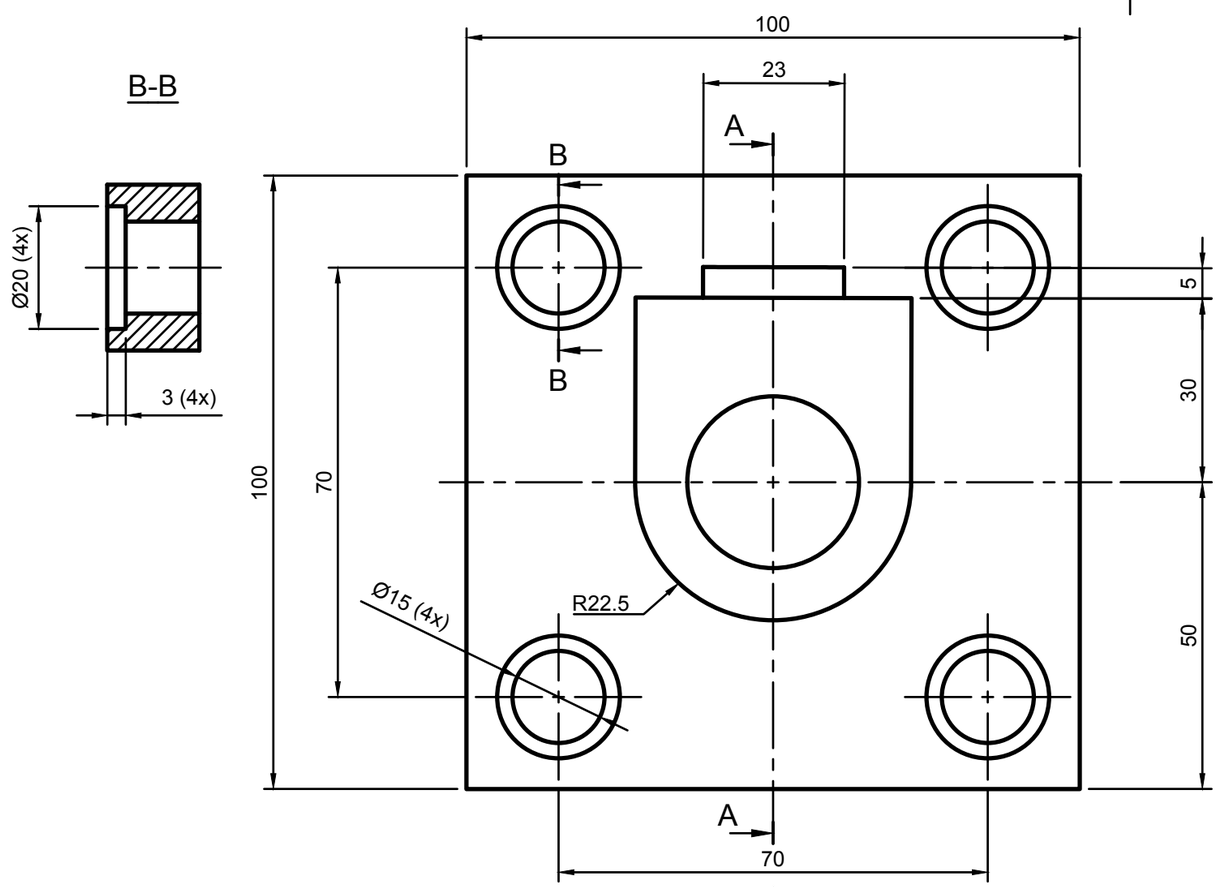

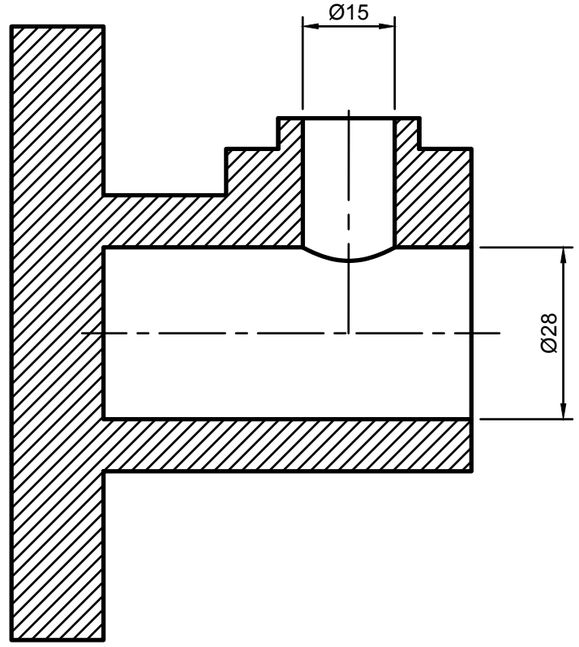

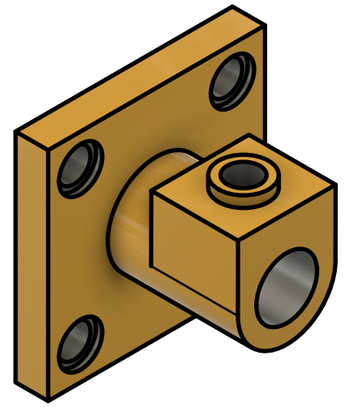

Item	Qty	Part Number	Material	Mass
1	1	B29	S355J2G3	1.70 kg

Parts List

General Tolerances		
Weld constr. ISO 5817 Class C	Castings ISO 8062 CT12	Threads ISO 965 6H/6g
Linear and angular dimensions		
Machined with cutting tools (does not include sawing)	ISO 2768-1-m	
Machined with non cutting tools (includes sawing)	ISO 2768-1-v	
Broken edges and angular dimensions	ISO 2768-1-c	

School subject: CAD1/CAD2	Scale: 1:1	Created by: Jorgen Nilsson	Approved by:
PERSTORP TEKNISKA GYMNASIUM		Document type: FUSION 360 Drawing	Approved date:
First angle projection		Title: B29 Modeling exercise	DWG No.: PG-241291
			Rev.: 0 / Date of issue: 2024-03-07 / Sheet: 1/1

This drawing is Perstorp Tekniska Gymnasium property and is protected according to existing law and may not without our approval be copied, imparted anyone or used without authorization

Revision history			
Rev.	Description	Created by	Rev. date

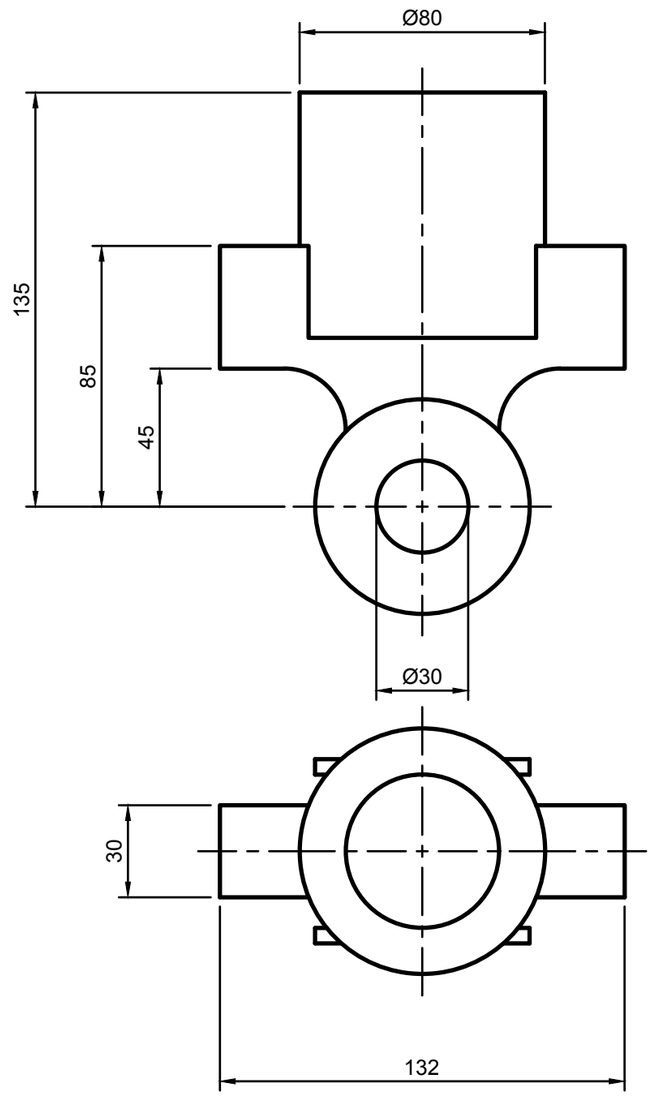

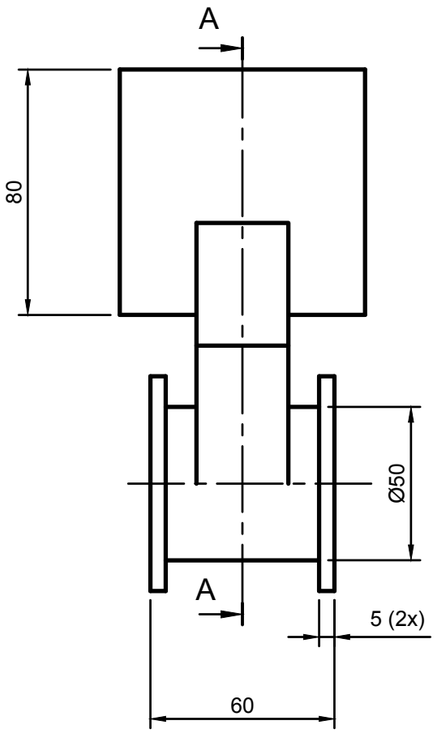

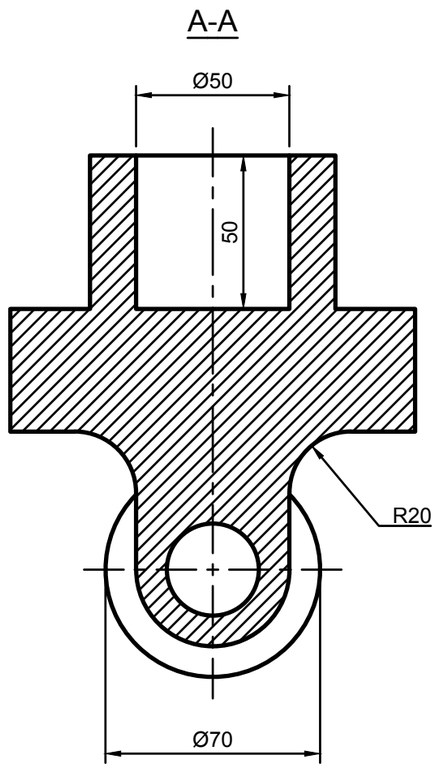

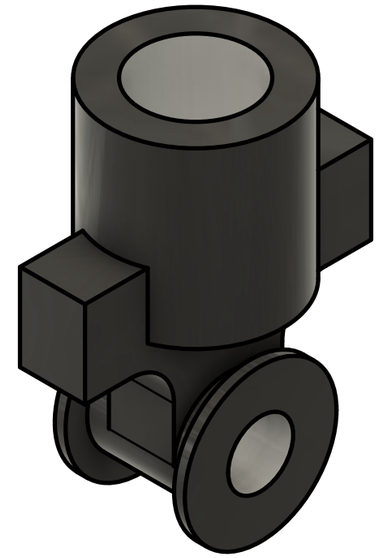

Item	Qty	Part Number	Material	Mass
1	1	B30	Plastic PETG	0.68 kg

Parts List

General Tolerances		
Weld constr. ISO 5817 Class C	Castings ISO 8062 CT12	Threads ISO 965 6H/6g
Linear and angular dimensions		
Machined with cutting tools (does not include sawing)	ISO 2768-1-m	
Machined with non cutting tools (includes sawing)	ISO 2768-1-v	
Broken edges and angular dimensions	ISO 2768-1-c	

School subject: CAD1/CAD2	Scale: 1:2	Created by: Jorgen Nilsson	Approved by:
PERSTORP TEKNISKA GYMNASIUM		Document type: FUSION 360 Drawing	Approved date:
First angle projection		Title: B30 Modeling exercise	DWG No.: PG-241295
			Rev.: 0 / Date of issue: 2024-03-07 / Sheet: 1/1

This drawing is Perstorp Tekniska Gymnasium property and is protected according to existing law and may not without our approval be copied, imparted anyone or used without authorization

Revision history			
Rev.	Description	Created by	Rev. date

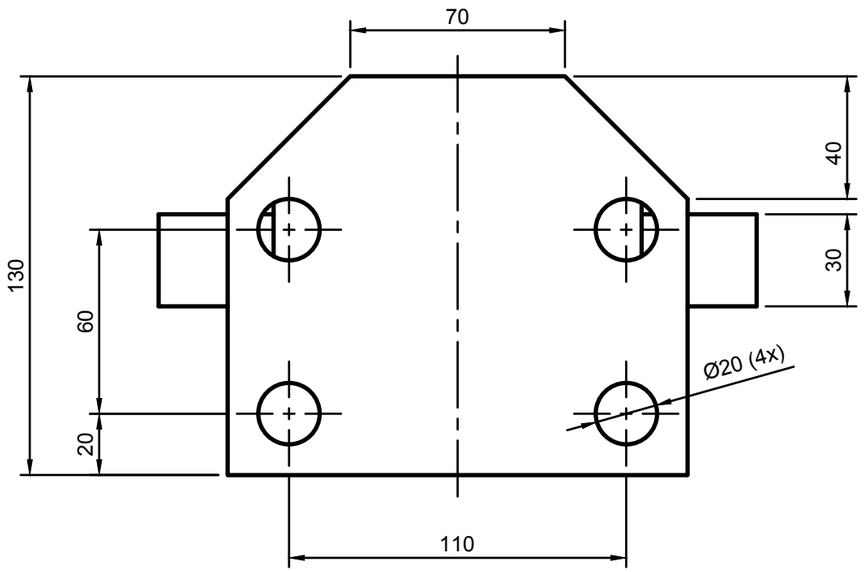

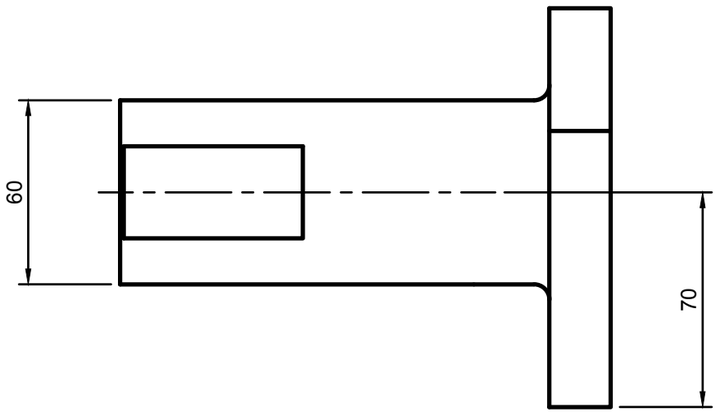

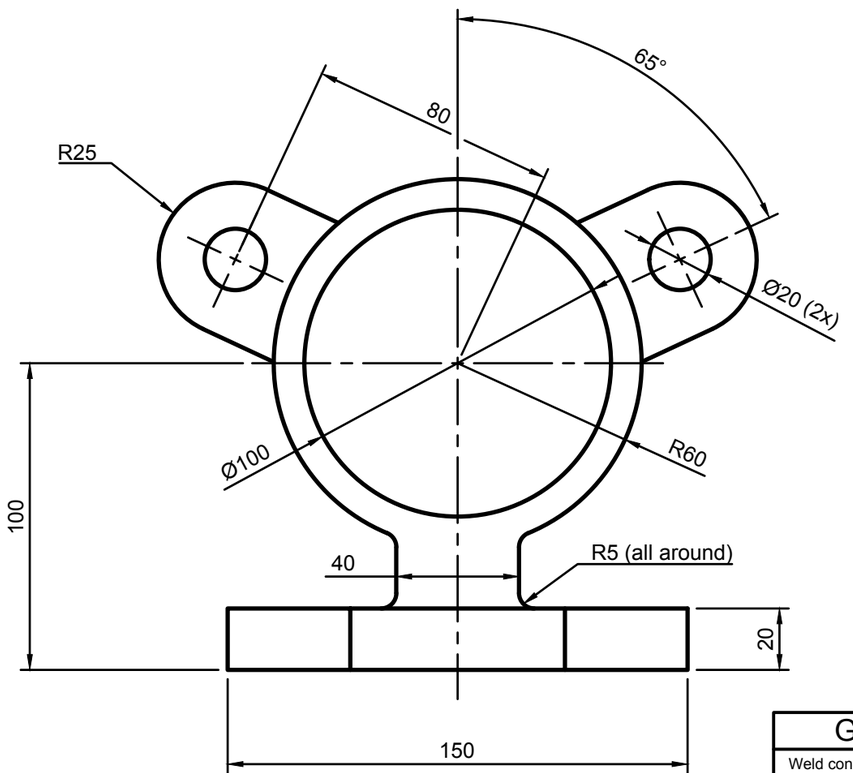

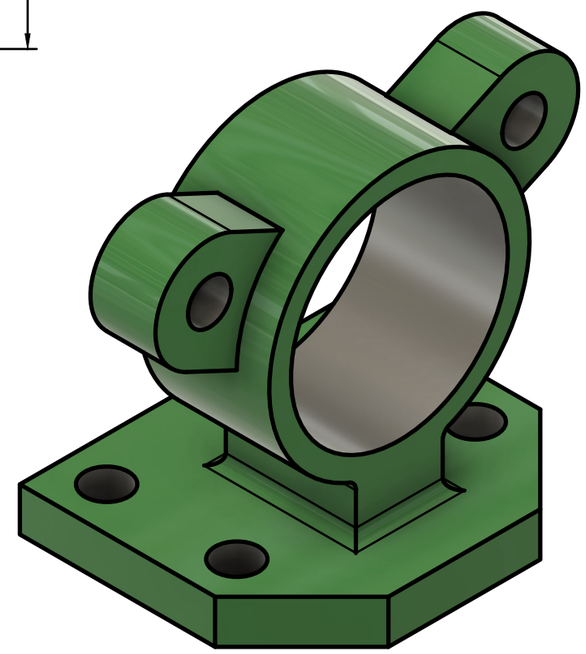

Item	Qty	Part Number	Material	Mass
1	1	B31	S355J2G3	5.48 kg

Parts List

General Tolerances		
Weld constr. ISO 5817 Class C	Castings ISO 8062 CT12	Threads ISO 965 6H/6g
Linear and angular dimensions		
Machined with cutting tools (does not include sawing)	ISO 2768-1-m	
Machined with non cutting tools (includes sawing)	ISO 2768-1-v	
Broken edges and angular dimensions	ISO 2768-1-c	

School subject: CAD1/CAD2	Scale: 1:2	Created by: Jorgen Nilsson	Approved by:
PERSTORP TEKNISKA GYMNASIUM		Document type: FUSION 360 Drawing	Approved date:
First angle projection		Title: B31 Modeling exercise	DWG No.: PG-241294
			Rev.: 0 / Date of issue: 2024-03-07 / Sheet: 1/1

This drawing is Perstorp Tekniska Gymnasium property and is protected according to existing law and may not without our approval be copied, imparted anyone or used without authorization

Revision history			
Rev.	Description	Created by	Rev. date

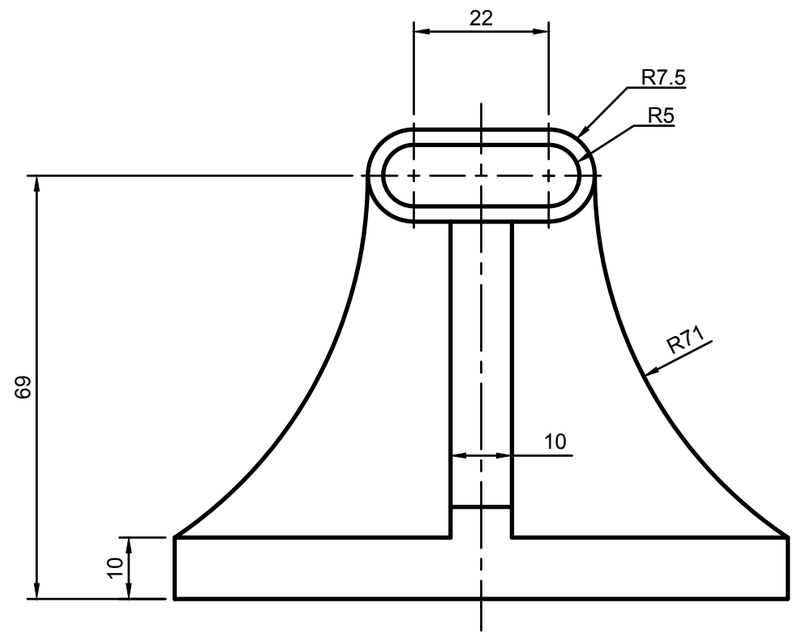

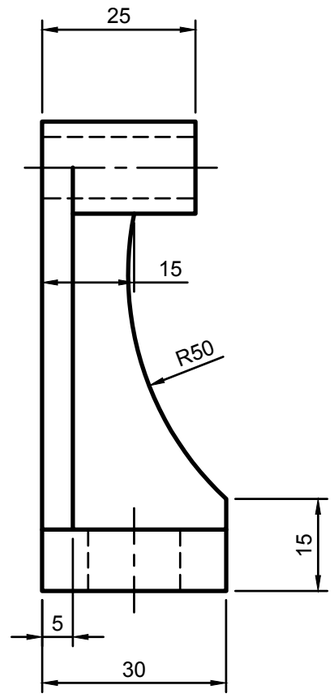

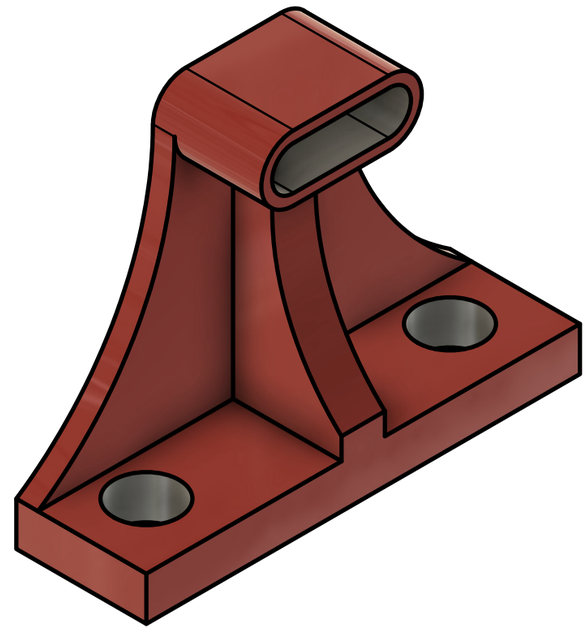

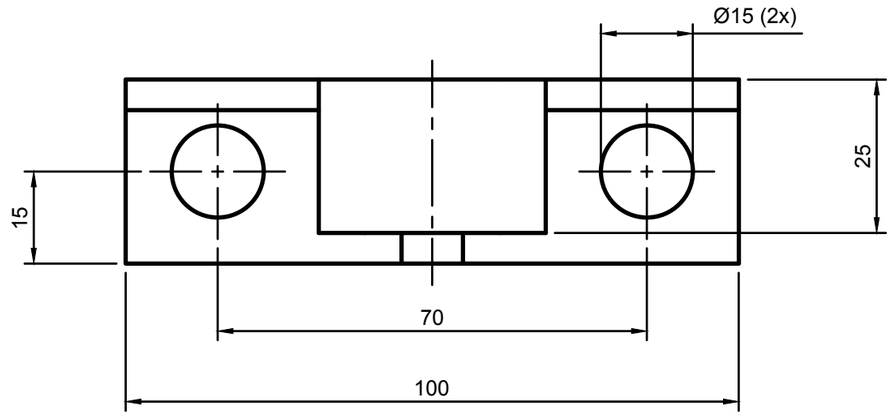

Item	Qty	Part Number	Material	Mass
1	1	B32	S355J2G3	0.42 kg

Parts List

General Tolerances		
Weld constr. ISO 5817 Class C	Castings ISO 8062 CT12	Threads ISO 965 6H/6g
Linear and angular dimensions		
Machined with cutting tools (does not include sawing)	ISO 2768-1-m	
Machined with non cutting tools (includes sawing)	ISO 2768-1-v	
Broken edges and angular dimensions	ISO 2768-1-c	

School subject: CAD1/CAD2	Scale: 1:1	Created by: Jorgen Nilsson	Approved by:
PERSTORP TEKNISKA GYMNASIUM		Document type: FUSION 360 Drawing	Approved date:
First angle projection		Title: B32 Modeling exercise	DWG No.: PG-241292
			Rev.: 0 / Date of issue: 2024-03-07 / Sheet: 1/1

This drawing is Perstorp Tekniska Gymnasium property and is protected according to existing law and may not without our approval be copied, imparted anyone or used without authorization

Revision history			
Rev.	Description	Created by	Rev. date

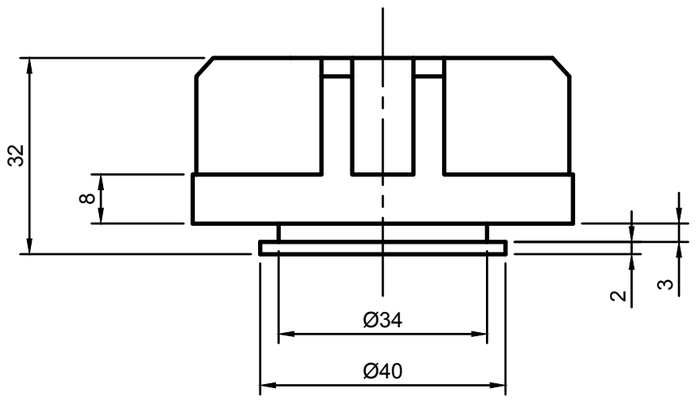

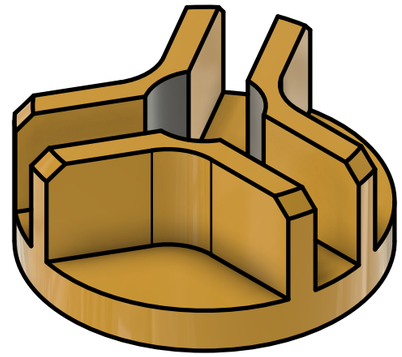

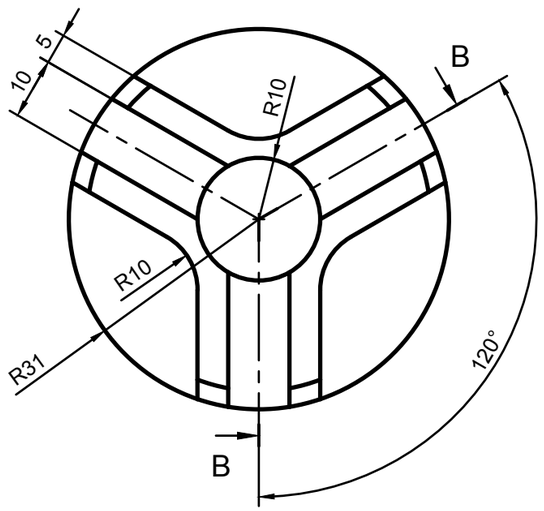

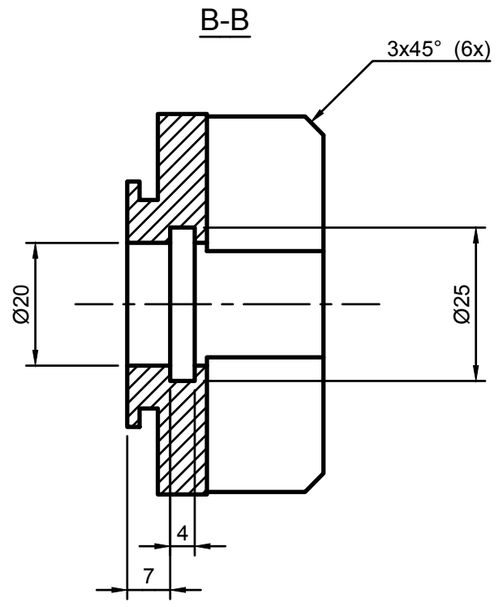

Item	Qty	Part Number	Material	Mass
1	1	B33	34CrMoNi6	0.30 kg

Parts List

General Tolerances		
Weld constr. ISO 5817 Class C	Castings ISO 8062 CT12	Threads ISO 965 6H/6g
Linear and angular dimensions		
Machined with cutting tools (does not include sawing)	ISO 2768-1-m	
Machined with non cutting tools (includes sawing)	ISO 2768-1-v	
Broken edges and angular dimensions	ISO 2768-1-c	

School subject: CAD1/CAD2	Scale: 1:1	Created by: Jorgen Nilsson	Approved by:
PERSTORP TEKNISKA GYMNASIUM		Document type: FUSION 360 Drawing	Approved date:
First angle projection		Title: B33 Modeling exercise	DWG No.: PG-242138
			Rev.: 0 / Date of issue: 2024-04-21 / Sheet: 1/1

This drawing is Perstorp Tekniska Gymnasium property and is protected according to existing law and may not without our approval be copied, imparted anyone or used without authorization

Revision history			
Rev.	Description	Created by	Rev. date

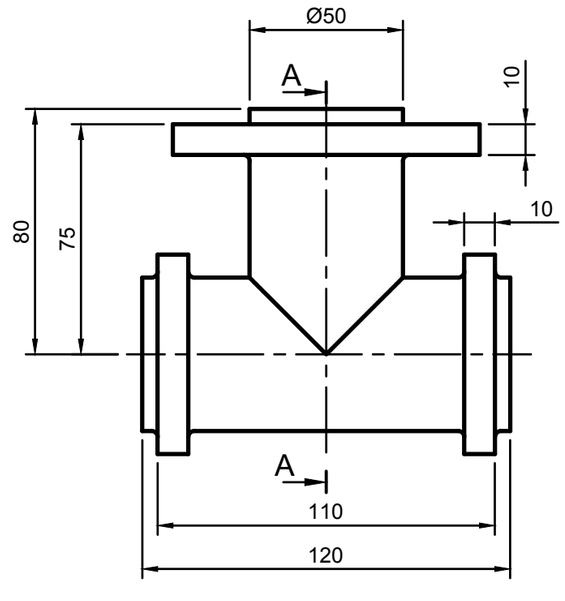

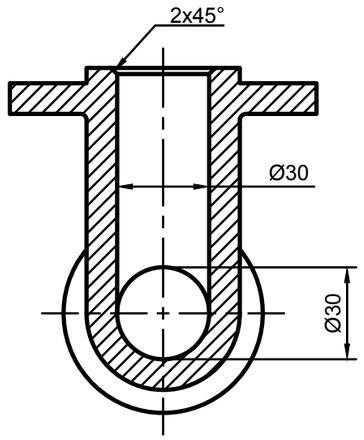

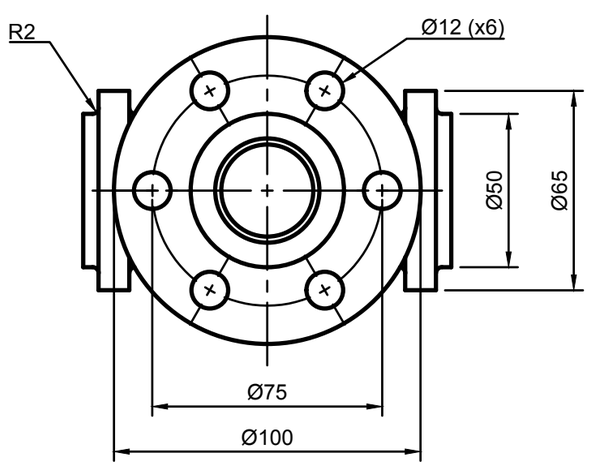

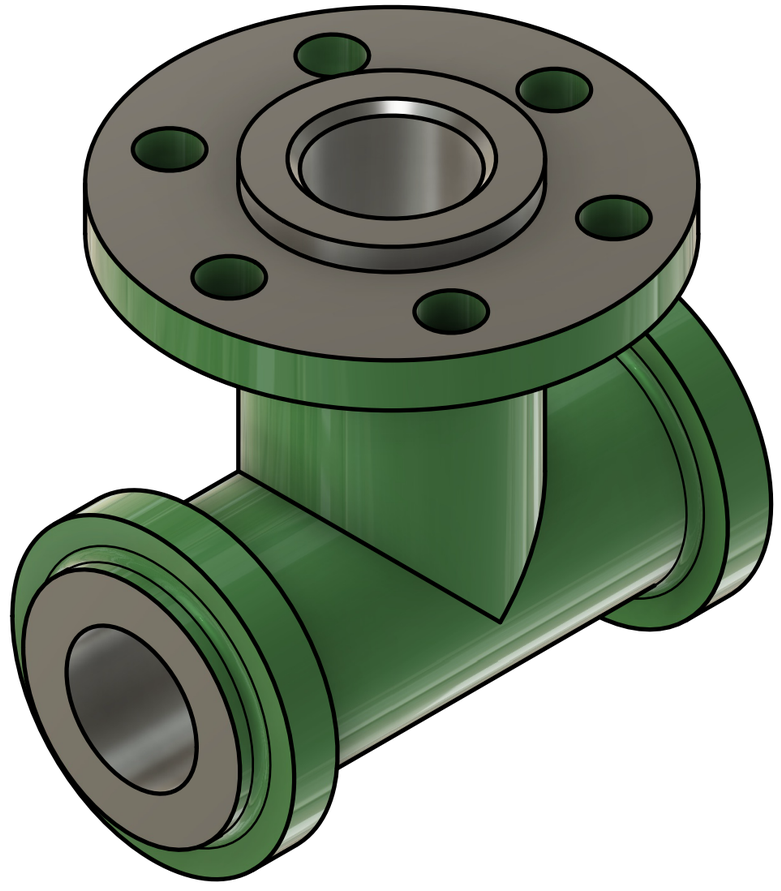

Item	Qty	Part Number	Material	Mass
1	1	B34	34CrMoNi6	2.34 kg

Parts List

General Tolerances		
Weld constr. ISO 5817 Class C	Castings ISO 8062 CT12	Threads ISO 965 6H/6g
Linear and angular dimensions		
Machined with cutting tools (does not include sawing)	ISO 2768-1-m	
Machined with non cutting tools (includes sawing)	ISO 2768-1-v	
Broken edges and angular dimensions	ISO 2768-1-c	

School subject: CAD1/CAD2	Scale: 1:2	Created by: Jorgen Nilsson	Approved by:
PERSTORP TEKNISKA GYMNASIUM		Document type: FUSION 360 Drawing	Approved date:
First angle projection		Title: B34 Modeling exercise	DWG No.: PG-241299
			Rev.: 0 / Date of issue: 2024-03-06 / Sheet: 1/1

This drawing is Perstorp Tekniska Gymnasium property and is protected according to existing law and may not without our approval be copied, imparted anyone or used without authorization

Revision history			
Rev.	Description	Created by	Rev. date

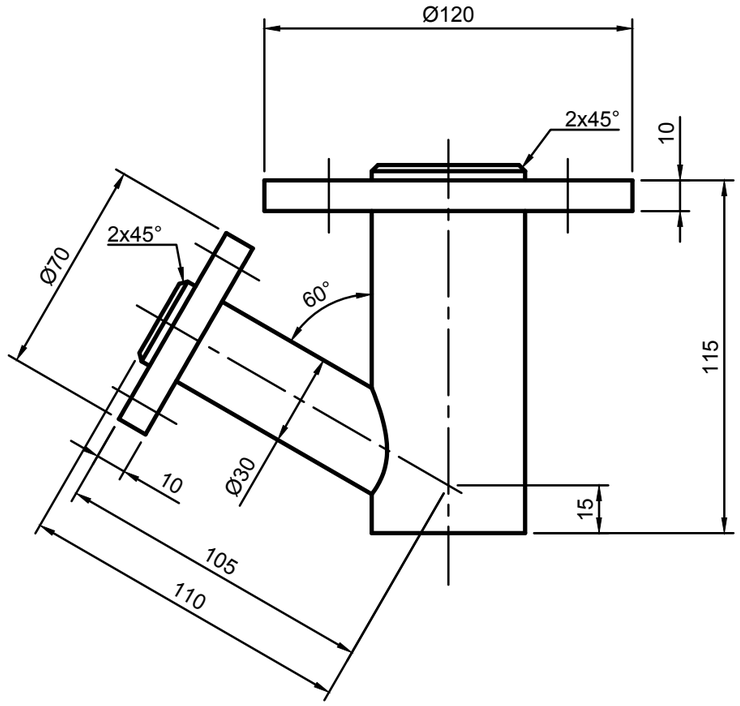

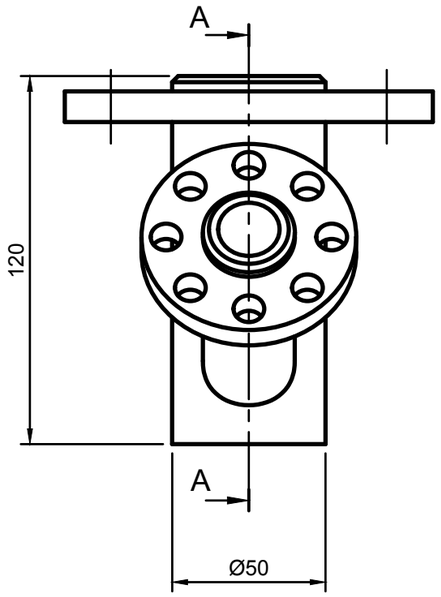

A-A

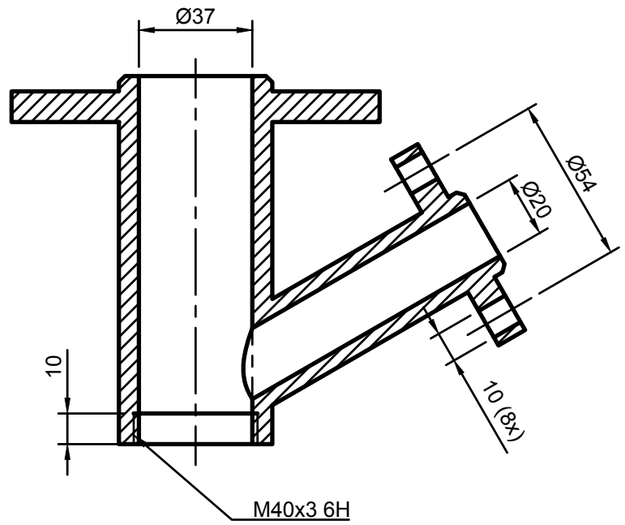

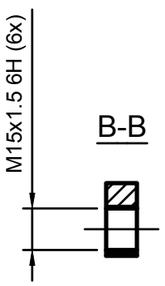

B-B

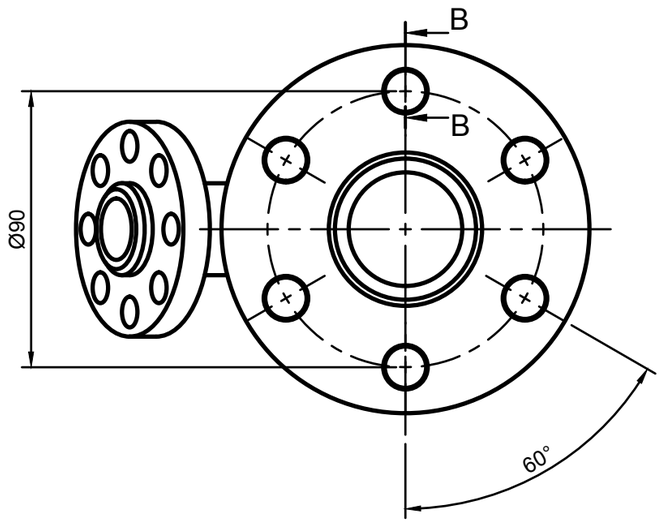

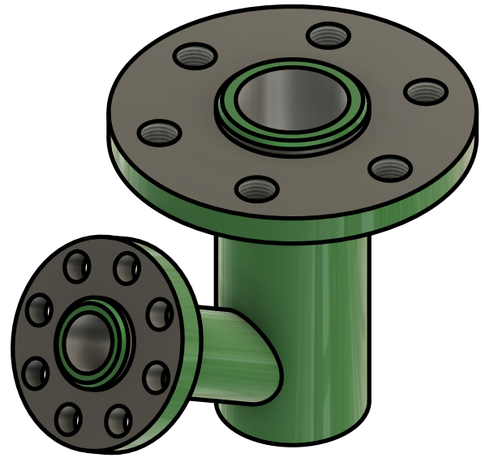

Item	Qty	Part Number	Material	Mass
1	1	B35	34CrMoNi6	1.93 kg

Parts List

General Tolerances		
Weld constr. ISO 5817 Class C	Castings ISO 8062 CT12	Threads ISO 965 6H/6g
Linear and angular dimensions		
Machined with cutting tools (does not include sawing)		ISO 2768-1-m
Machined with non cutting tools (includes sawing)		ISO 2768-1-v
Broken edges and angular dimensions		ISO 2768-1-c

School subject: CAD1/CAD2	Scale: 1:2	Created by: Jorgen Nilsson	Approved by:
PERSTORP TEKNISKA GYMNASIUM		Document type: FUSION 360 Drawing	Approved date:
First angle projection		Title: B35 Modeling exercise	DWG No.: PG-241298
			Rev.: 0 / Date of issue: 2023-12-03 / Sheet: 1/1

This drawing is Perstorp Tekniska Gymnasium property and is protected according to existing law and may not without our approval be copied, imparted anyone or used without authorization

Revision history			
Rev.	Description	Created by	Rev. date

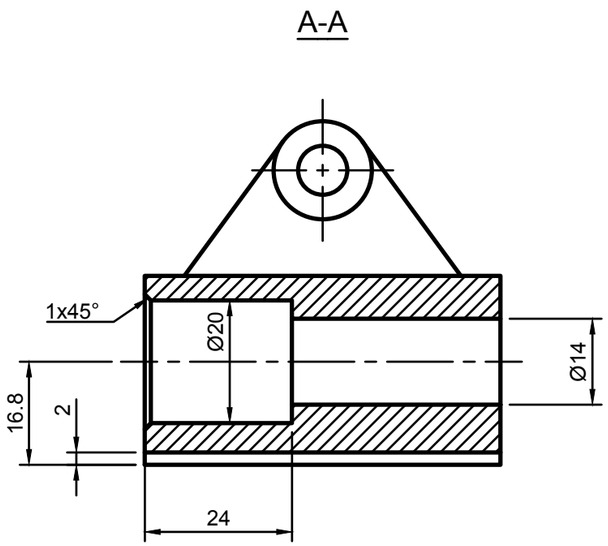

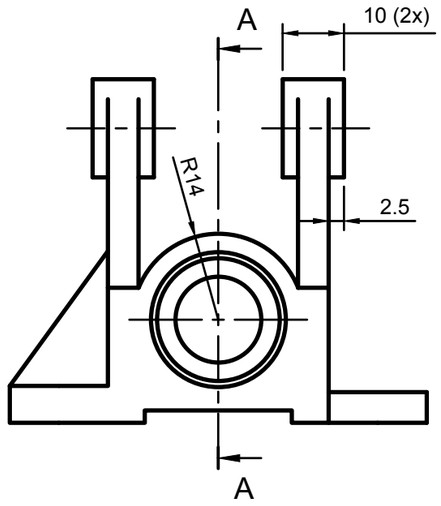

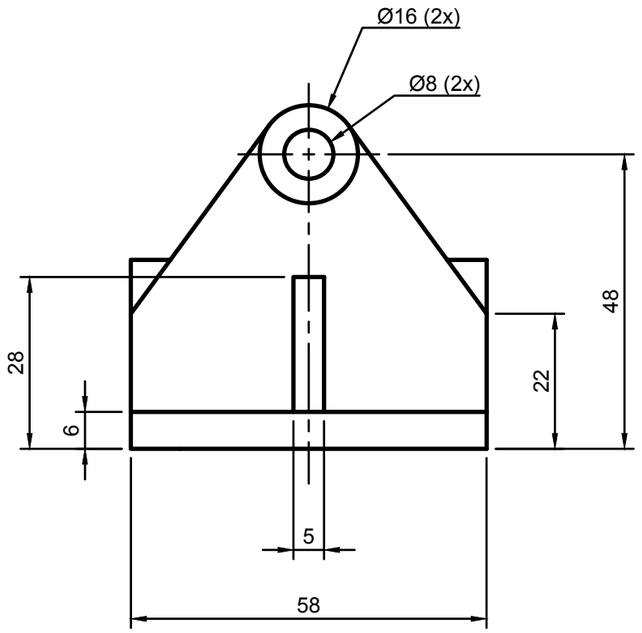

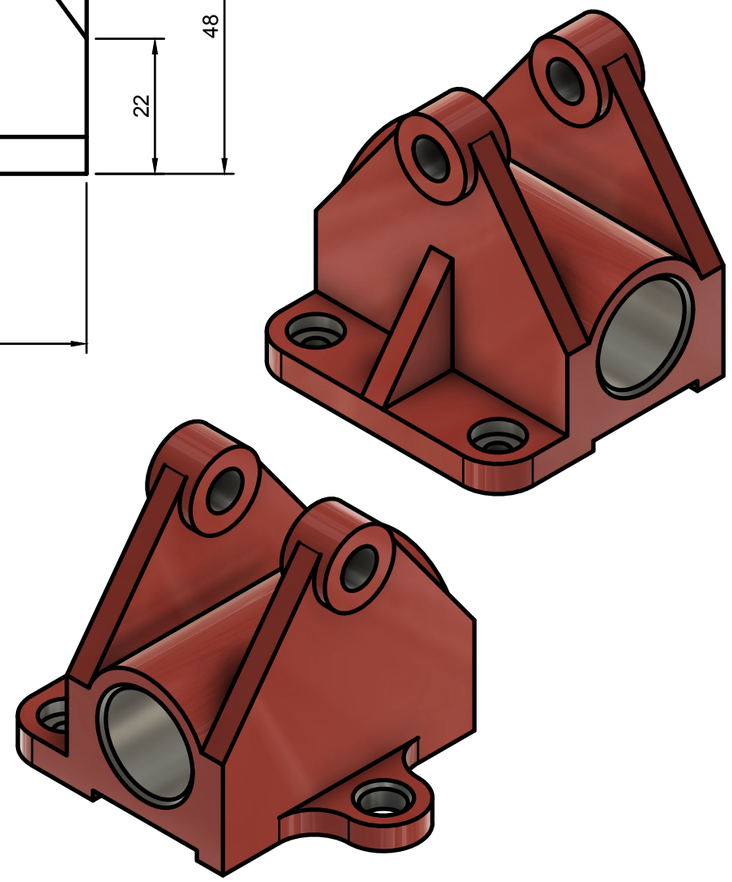

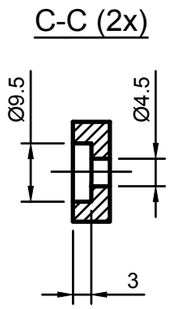

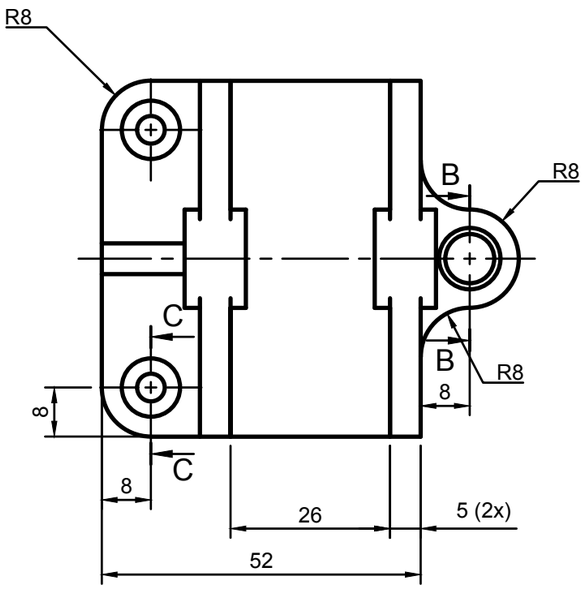

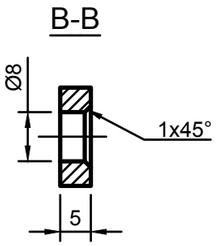

Item	Qty	Part Number	Material	Mass
1	1	B36	S355J2G3	0.46 kg

Parts List

General Tolerances		
Weld constr. ISO 5817 Class C	Castings ISO 8062 CT12	Threads ISO 965 6H/6g
Linear and angular dimensions		
Machined with cutting tools (does not include sawing)	ISO 2768-1-m	
Machined with non cutting tools (includes sawing)	ISO 2768-1-v	
Broken edges and angular dimensions	ISO 2768-1-c	

School subject: CAD1/CAD2	Scale: 1:1	Created by: Jorgen Nilsson	Approved by:
PERSTORP TEKNISKA GYMNASIUM		Document type: FUSION 360 Drawing	Approved date:
First angle projection		Title: B36 Modeling exercise	DWG No.: PG-242110
			Rev.: 0 / Date of issue: 2024-04-10 / Sheet: 1/1

This drawing is Perstorp Tekniska Gymnasium property and is protected according to existing law and may not without our approval be copied, imparted anyone or used without authorization

Revision history			
Rev.	Description	Created by	Rev. date

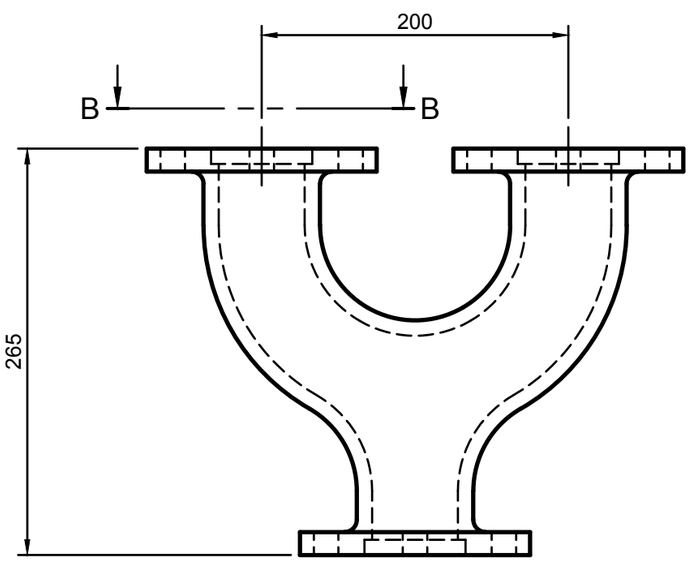

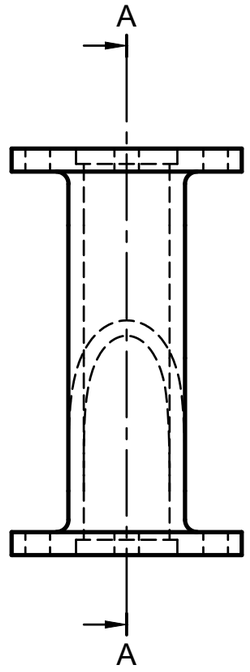

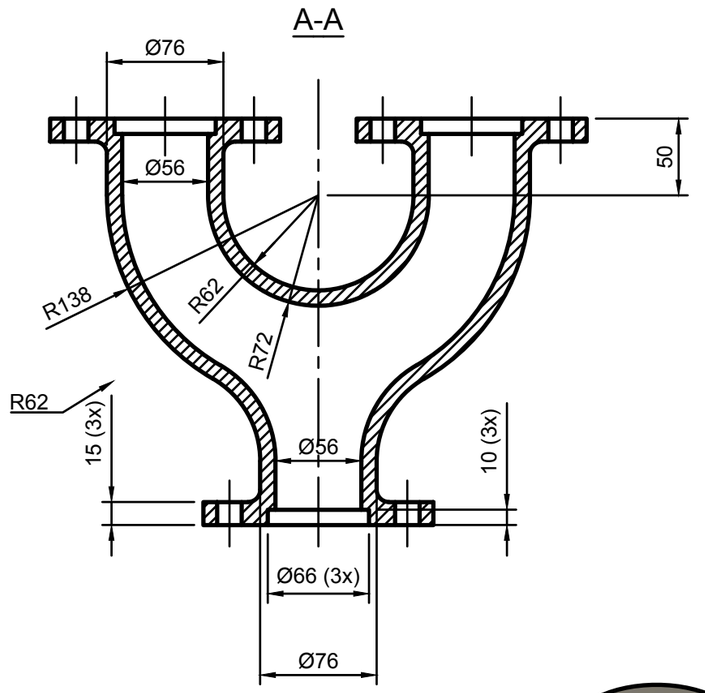



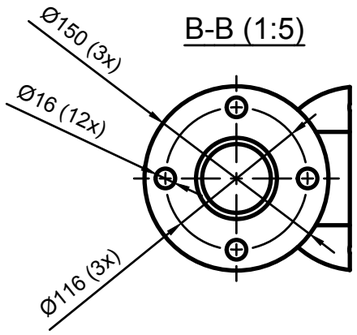

Item	Qty	Part Number	Material	Mass
1	1	B37	Al 4120	4.19 kg

Parts List

General Tolerances		
Weld constr. ISO 5817 Class C	Castings ISO 8062 CT12	Threads ISO 965 6H/6g
Linear and angular dimensions		
Machined with cutting tools (does not include sawing)	ISO 2768-1-m	
Machined with non cutting tools (includes sawing)	ISO 2768-1-v	
Broken edges and angular dimensions	ISO 2768-1-c	

School subject: CAD1/CAD2	Scale: 1:4	Created by: Jorgen Nilsson	Approved by:
PERSTORP TEKNISKA GYMNASIUM		Document type: FUSION 360 Drawing	Approved date:
First angle projection		Title: B37 Modeling exercise	DWG No.: PG-242118
			Rev.: 0 / Date of issue: 2024-04-08 / Sheet: 1/1

This drawing is Perstorp Tekniska Gymnasium property and is protected according to existing law and may not without our approval be copied, imparted anyone or used without authorization

Revision history			
Rev.	Description	Created by	Rev. date

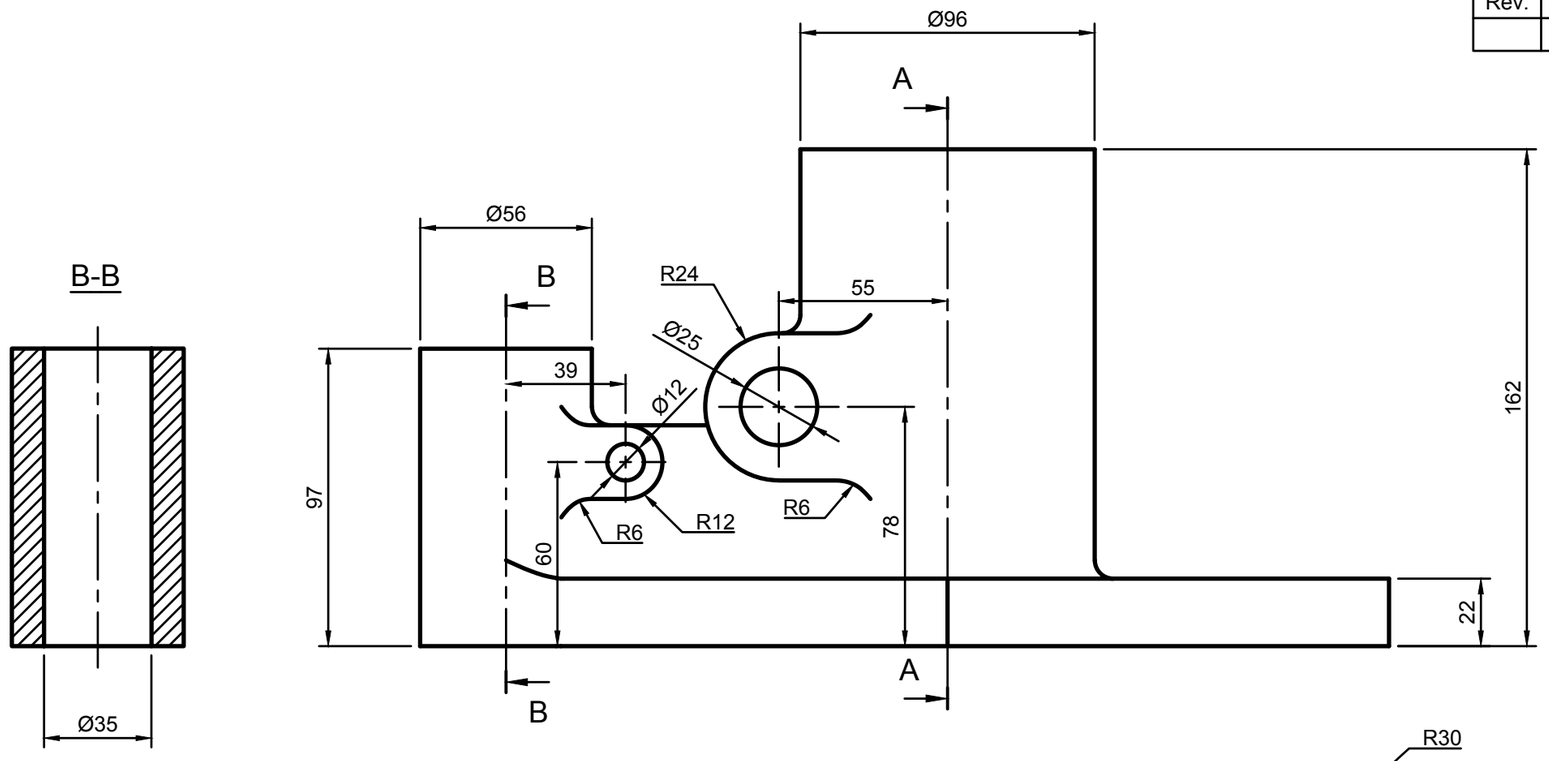

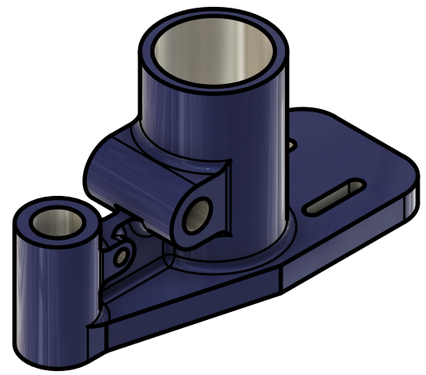

Item	Qty	Part Number	Material	Mass
1	1	B38	S355J2G3	8.53 kg

Parts List

General Tolerances		
Weld constr. ISO 5817 Class C	Castings ISO 8062 CT12	Threads ISO 965 6H/6g
Linear and angular dimensions		
Machined with cutting tools (does not include sawing)	ISO 2768-1-m	
Machined with non cutting tools (includes sawing)	ISO 2768-1-v	
Broken edges and angular dimensions	ISO 2768-1-c	

School subject: CAD1/CAD2	Scale: 1:2	Created by: Jorgen Nilsson	Approved by:
PERSTORP TEKNISKA GYMNASIUM		Document type: FUSION 360 Drawing	Approved date:
First angle projection		Title: B38 Modeling exercise	DWG No.: PG-242174
			Rev.: 0 / Date of issue: 2024-04-13 / Sheet: 1/1

This drawing is Perstorp Tekniska Gymnasium property and is protected according to existing law and may not without our approval be copied, imparted anyone or used without authorization

Revision history			
Rev.	Description	Created by	Rev. date

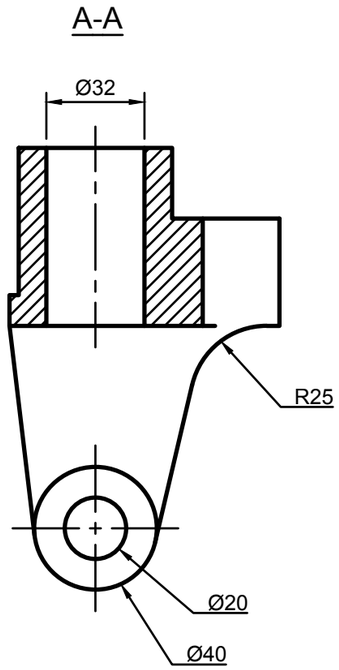

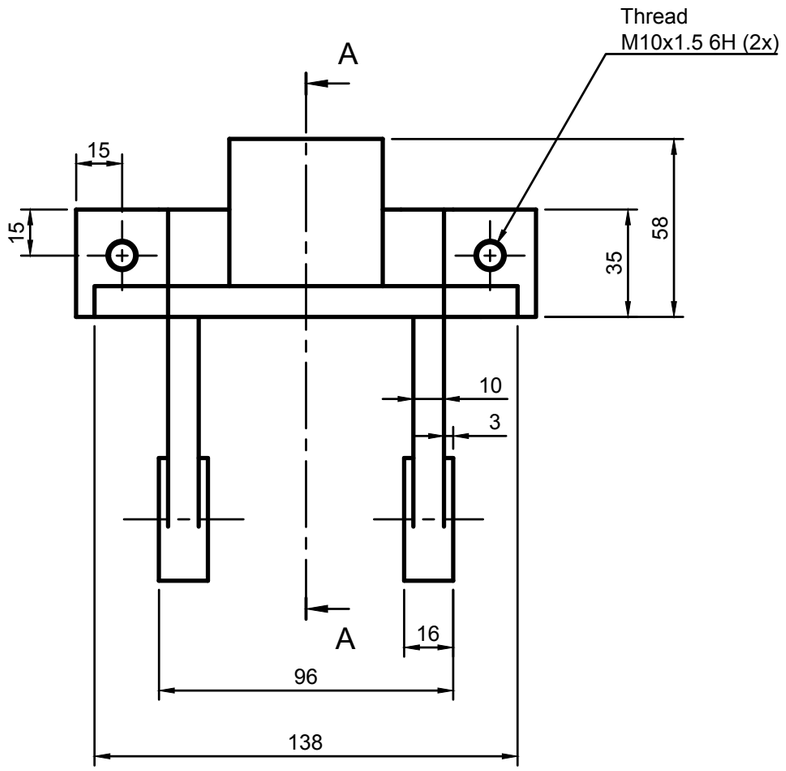

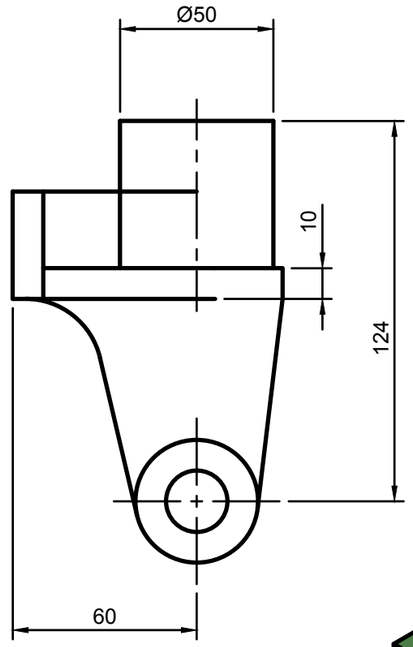

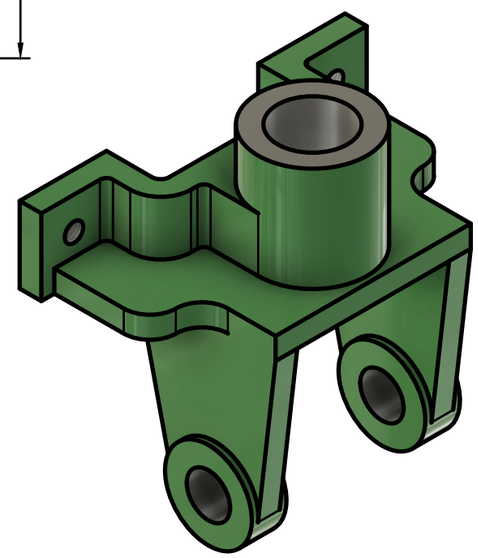

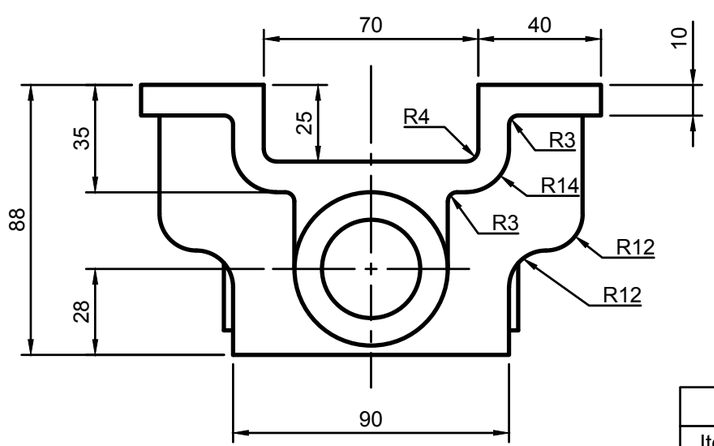

Item	Qty	Part Number	Material	Mass
1	1	B39	S355J2G3	2.19 kg

Parts List

General Tolerances		
Weld constr. ISO 5817 Class C	Castings ISO 8062 CT12	Threads ISO 965 6H/6g
Linear and angular dimensions		
Machined with cutting tools (does not include sawing)	ISO 2768-1-m	
Machined with non cutting tools (includes sawing)	ISO 2768-1-v	
Broken edges and angular dimensions	ISO 2768-1-c	

School subject: CAD1/CAD2	Scale: 1:2	Created by: Jorgen Nilsson	Approved by:
PERSTORP TEKNISKA GYMNASIUM		Document type: FUSION 360 Drawing	Approved date:
First angle projection		Title: B39 Modeling exercise	DWG No.: PG-242172
			Rev.: 0 / Date of issue: 2024-11-12 / Sheet: 1/1

This drawing is Perstorp Tekniska Gymnasium property and is protected according to existing law and may not without our approval be copied, imparted anyone or used without authorization

Revision history			
Rev.	Description	Created by	Rev. date

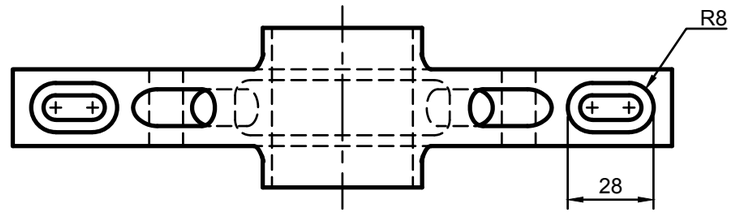

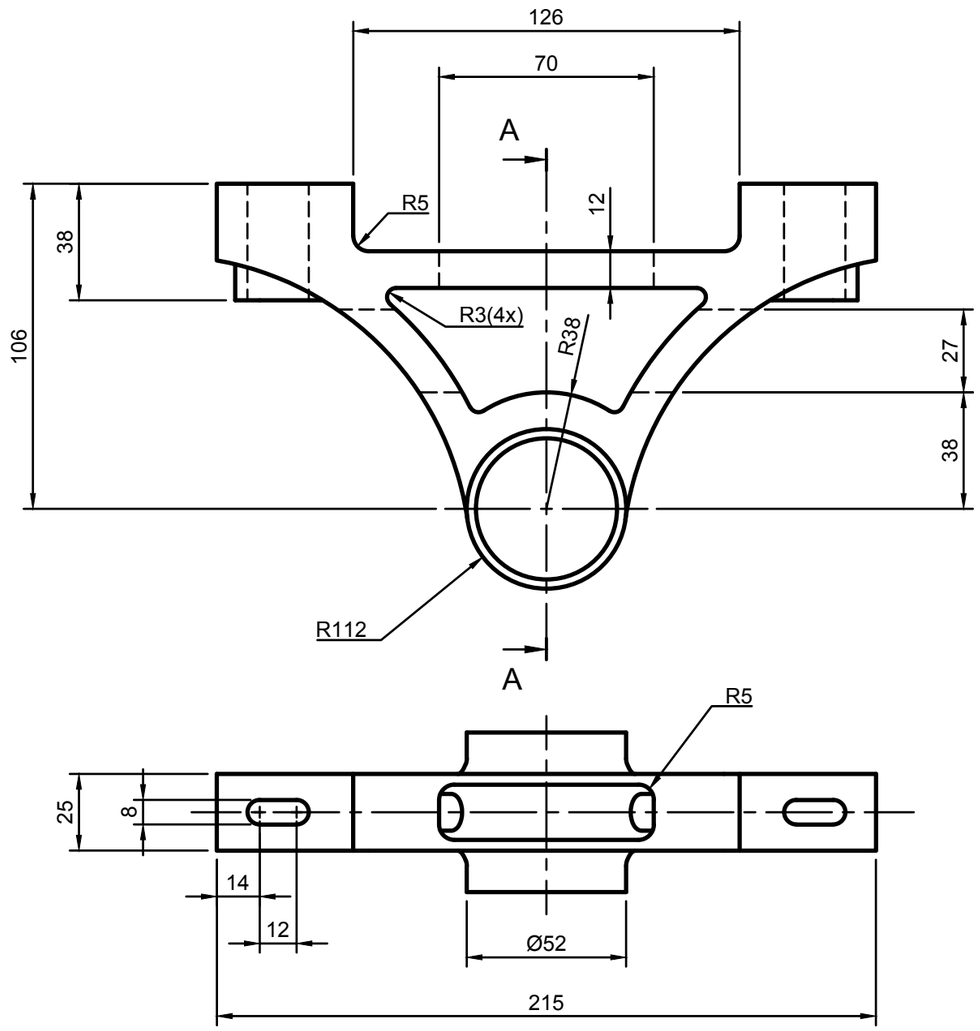

A-A

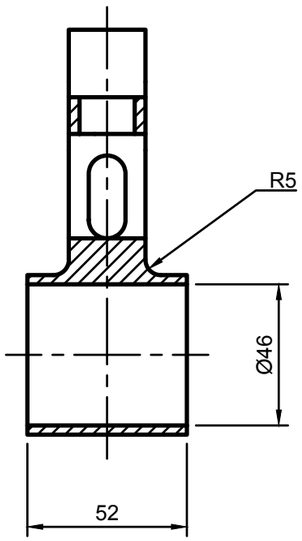

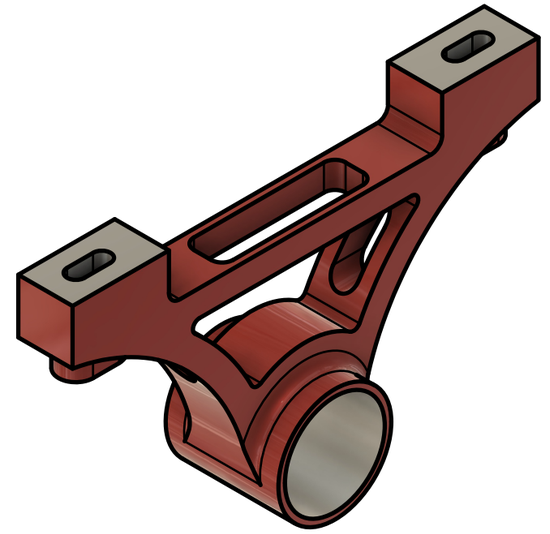

Item	Qty	Part Number	Material	Mass
1	1	B40	S355J2G3	1.28 kg

Parts List

General Tolerances		
Weld constr. ISO 5817 Class C	Castings ISO 8062 CT12	Threads ISO 965 6H/6g
Linear and angular dimensions		
Machined with cutting tools (does not include sawing)	ISO 2768-1-m	
Machined with non cutting tools (includes sawing)	ISO 2768-1-v	
Broken edges and angular dimensions	ISO 2768-1-c	

School subject: CAD1/CAD2	Scale: 1:2	Created by: Jorgen Nilsson	Approved by:
PERSTORP TEKNISKA GYMNASIUM		Document type: FUSION 360 Drawing	Approved date:
First angle projection		Title: B40 Modeling exercise	DWG No.: PG-242142
			Rev.: 0 / Date of issue: 2024-04-21 / Sheet: 1/1

This drawing is Perstorp Tekniska Gymnasium property and is protected according to existing law and may not without our approval be copied, imparted anyone or used without authorization

Revision history			
Rev.	Description	Created by	Rev. date

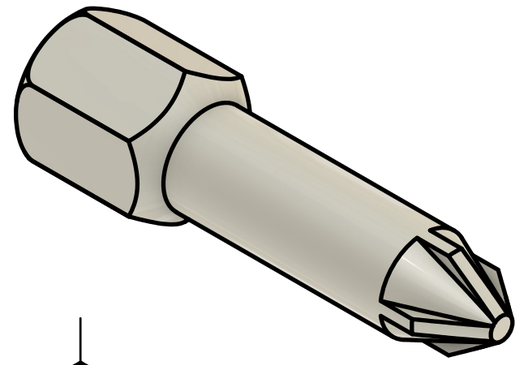

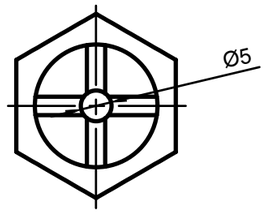

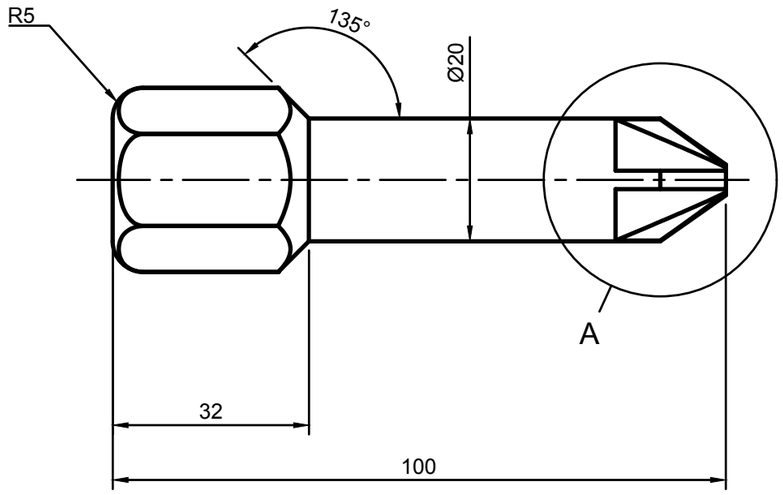

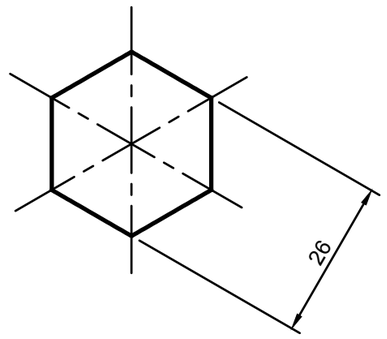

A (2:1)

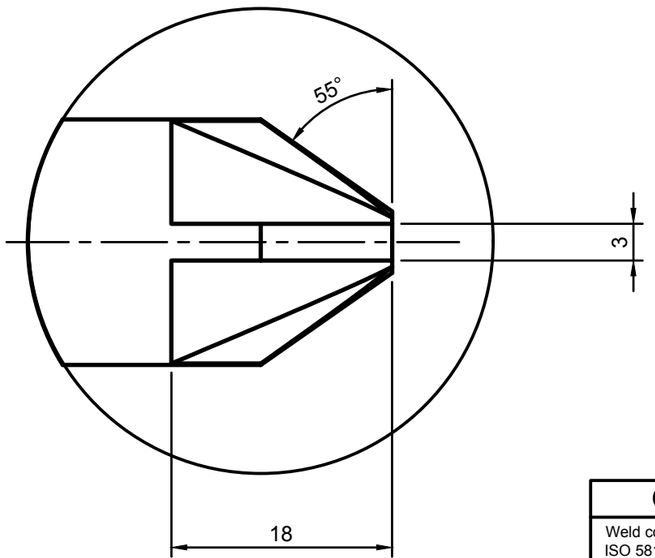

Item	Qty	Part Number	Material	Mass
1	1	B41	Al 4120	0.10 kg

Parts List

General Tolerances		
Weld constr. ISO 5817 Class C	Castings ISO 8062 CT12	Threads ISO 965 6H/6g
Linear and angular dimensions		
Machined with cutting tools (does not include sawing)	ISO 2768-1-m	
Machined with non cutting tools (includes sawing)	ISO 2768-1-v	
Broken edges and angular dimensions	ISO 2768-1-c	

School subject: CAD1/CAD2	Scale: 1:1	Created by: Jorgen Nilsson	Approved by:
PERSTORP TEKNISKA GYMNASIUM		Document type: FUSION 360 Drawing	Approved date:
First angle projection		Title: B41 Modeling exercise	DWG No.: PG-24176
			Rev.: 0 / Date of issue: 2024-12-21 / Sheet: 1/1

This drawing is Perstorp Tekniska Gymnasium property and is protected according to existing law and may not without our approval be copied, imparted anyone or used without authorization

Revision history			
Rev.	Description	Created by	Rev. date

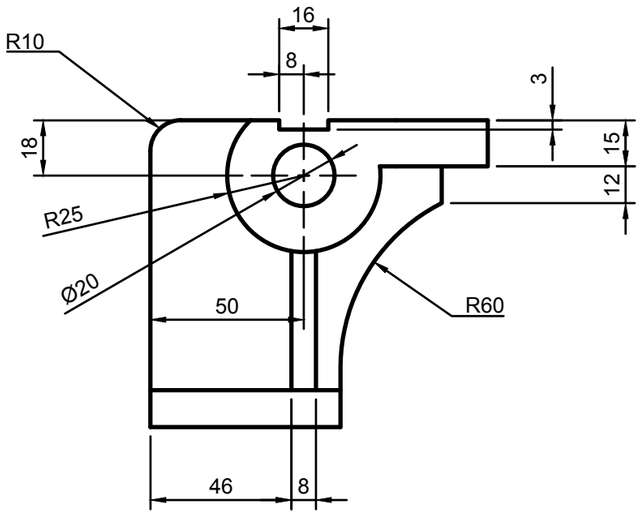

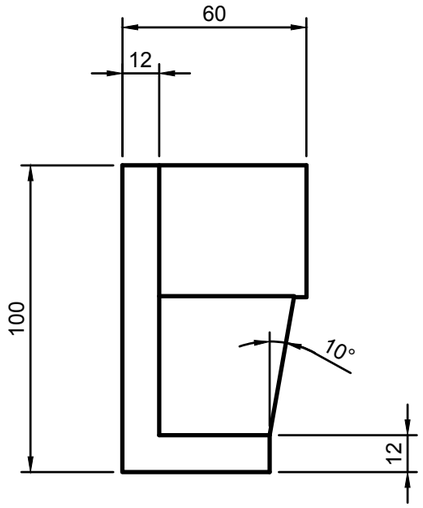

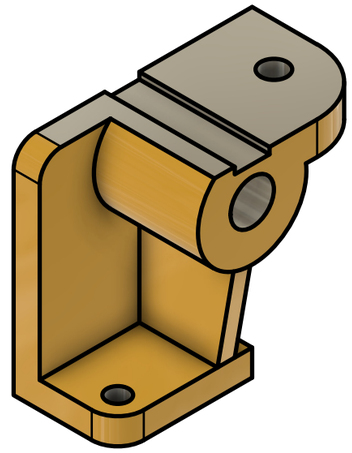

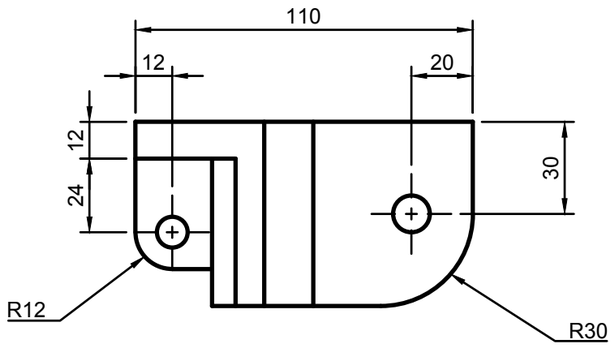

Item	Qty	Part Number	Material	Mass
1	1	B42	S355J2G3	1.73 kg

Parts List

General Tolerances		
Weld constr. ISO 5817 Class C	Castings ISO 8062 CT12	Threads ISO 965 6H/6g
Linear and angular dimensions		
Machined with cutting tools (does not include sawing)	ISO 2768-1-m	
Machined with non cutting tools (includes sawing)	ISO 2768-1-v	
Broken edges and angular dimensions	ISO 2768-1-c	

School subject: CAD1/CAD2	Scale: 1:2	Created by: Jorgen Nilsson	Approved by:
PERSTORP TEKNISKA GYMNASIUM		Document type: FUSION 360 Drawing	Approved date:
First angle projection		Title: B42 Modeling exercise	DWG No.: PG-242157
			Rev.: 0 / Date of issue: 2024-04-21 / Sheet: 1/1

This drawing is Perstorp Tekniska Gymnasium property and is protected according to existing law and may not without our approval be copied, imparted anyone or used without authorization

Revision history			
Rev.	Description	Created by	Rev. date

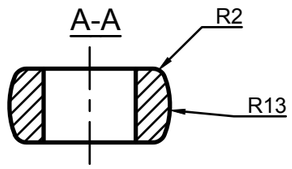

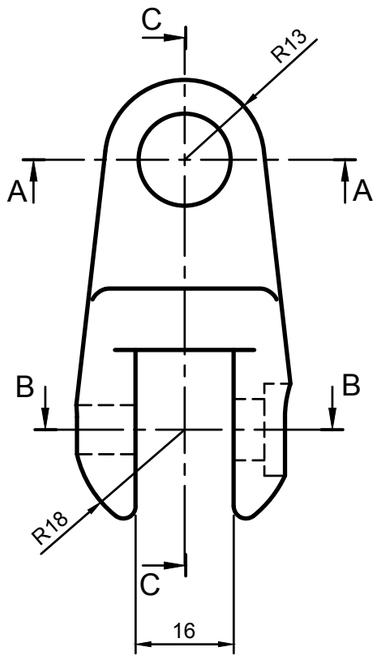

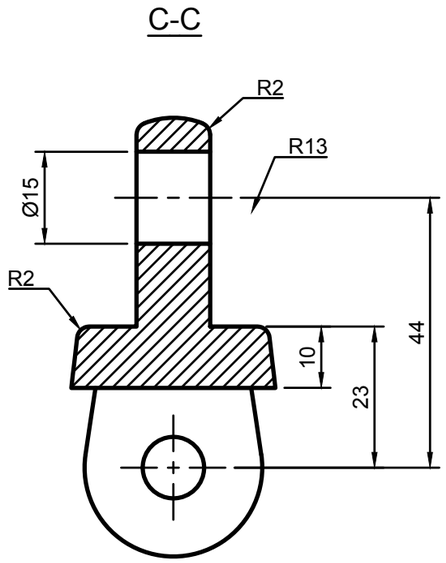

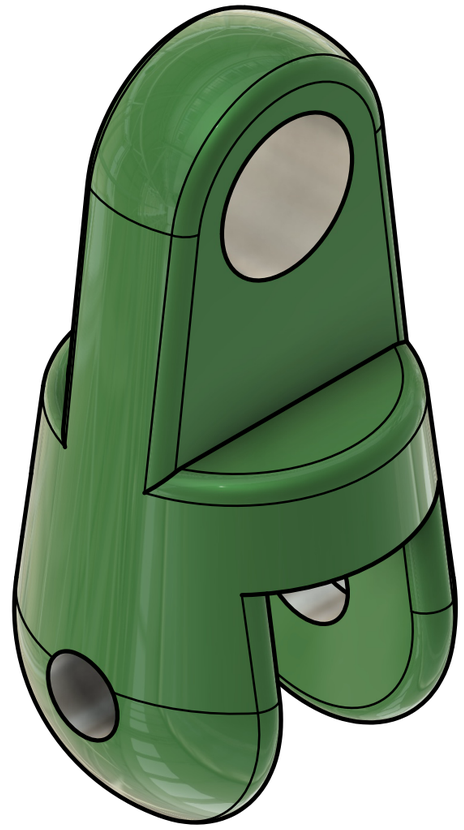

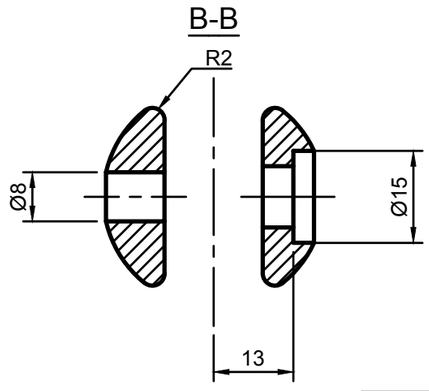

Item	Qty	Part Number	Material	Mass
1	1	B43	Al 4120	0.06 kg

Parts List

General Tolerances		
Weld constr. ISO 5817 Class C	Castings ISO 8062 CT12	Threads ISO 965 6H/6g
Linear and angular dimensions		
Machined with cutting tools (does not include sawing)	ISO 2768-1-m	
Machined with non cutting tools (includes sawing)	ISO 2768-1-v	
Broken edges and angular dimensions	ISO 2768-1-c	

School subject: CAD1/CAD2	Scale: 2:1	Created by: Jorgen Nilsson	Approved by:
PERSTORP TEKNISKA GYMNASIUM		Document type: FUSION 360 Drawing	Approved date:
First angle projection		Title: B43 Modeling exercise	DWG No.: PG-242161
			Rev.: 0 / Date of issue: 2024-04-13 / Sheet: 1/1

This drawing is Perstorp Tekniska Gymnasium property and is protected according to existing law and may not without our approval be copied, imparted anyone or used without authorization

Revision history			
Rev.	Description	Created by	Rev. date

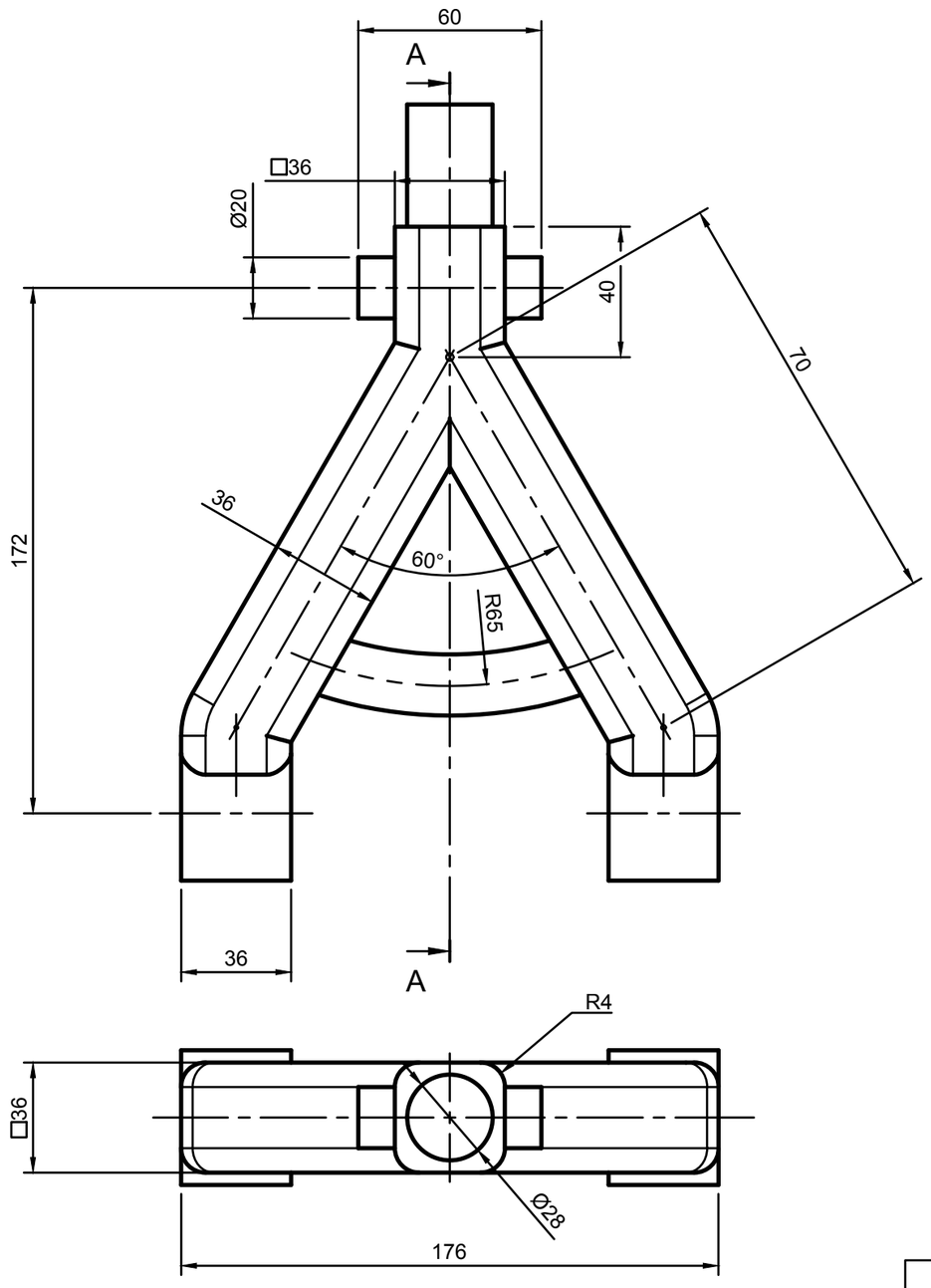

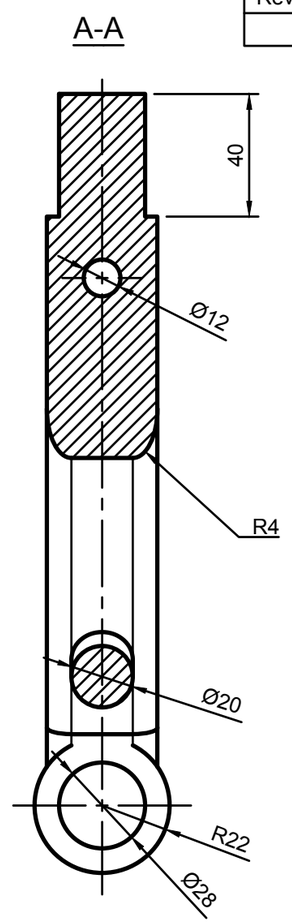

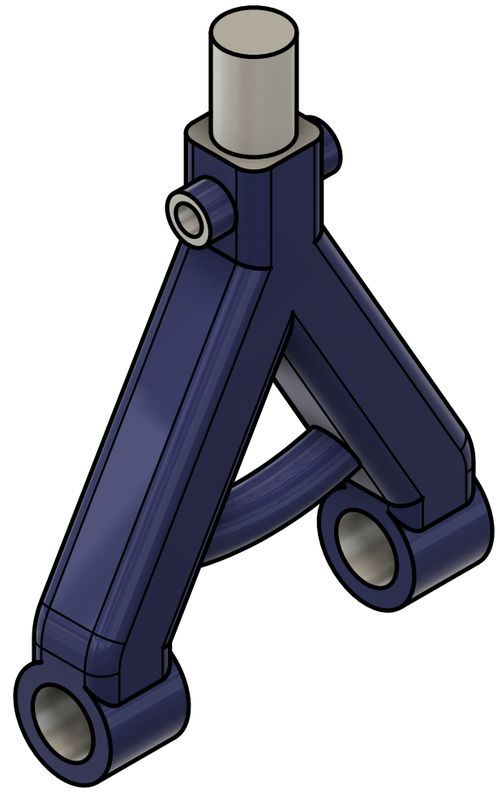

Item	Qty	Part Number	Material	Mass
1	1	B44	Al 4120	1.38 kg

Parts List

General Tolerances		
Weld constr. ISO 5817 Class C	Castings ISO 8062 CT12	Threads ISO 965 6H/6g
Linear and angular dimensions		
Machined with cutting tools (does not include sawing)	ISO 2768-1-m	
Machined with non cutting tools (includes sawing)	ISO 2768-1-v	
Broken edges and angular dimensions	ISO 2768-1-c	

School subject: CAD1/CAD2	Scale: 1:1	Created by: Jorgen Nilsson	Approved by:
PERSTORP TEKNISKA GYMNASIUM		Document type: FUSION 360 Drawing	Approved date:
First angle projection		Title: B44 Modeling exercise	DWG No.: PG-24166
			Rev.: 0 / Date of issue: 2024-04-14 / Sheet: 1/1

This drawing is Perstorp Tekniska Gymnasium property and is protected according to existing law and may not without our approval be copied, imparted anyone or used without authorization

Revision history			
Rev.	Description	Created by	Rev. date

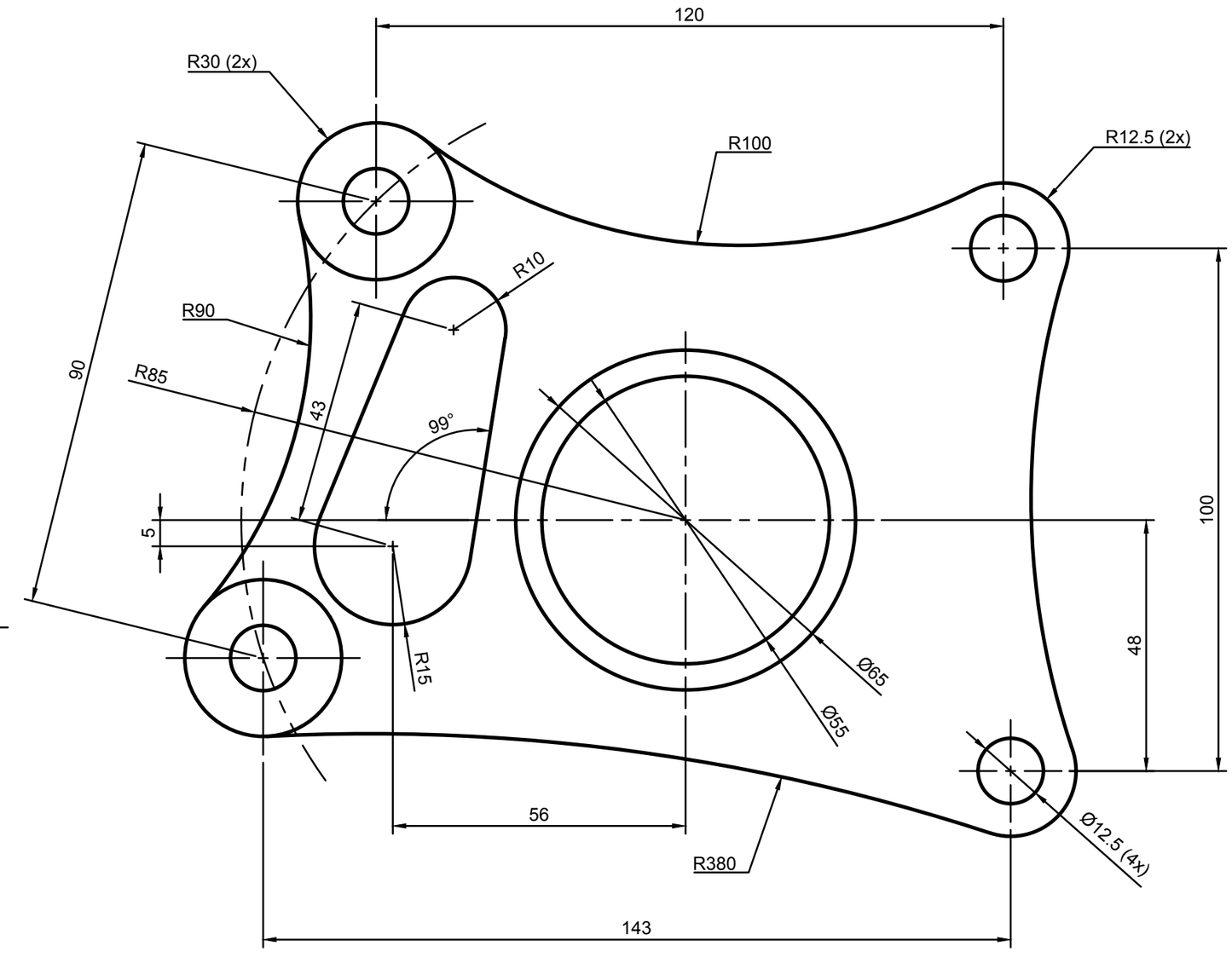

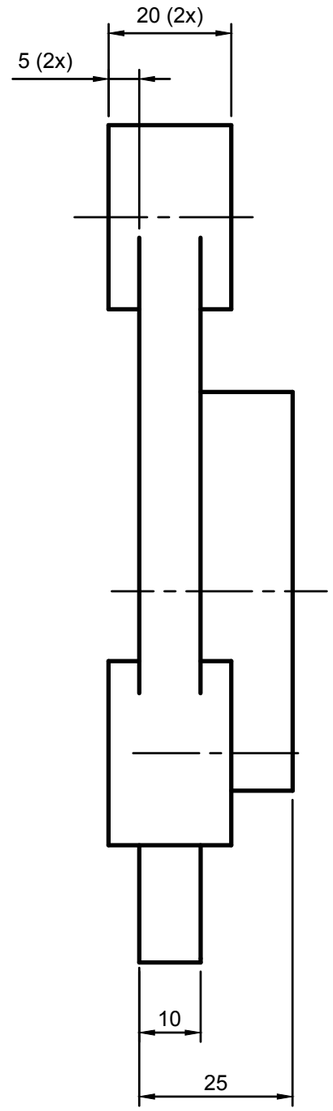

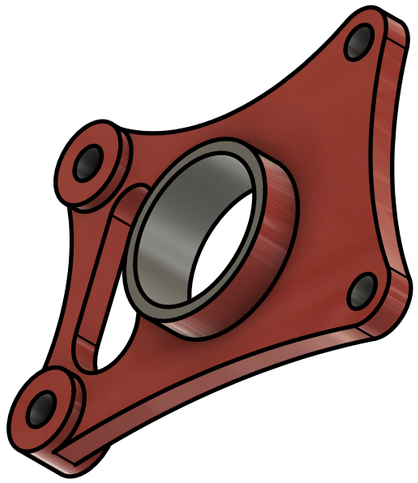

Item	Qty	Part Number	Material	Mass
1	1	B45	S355J2G3	1.13 kg

Parts List

General Tolerances		
Weld constr. ISO 5817 Class C	Castings ISO 8062 CT12	Threads ISO 965 6H/6g
Linear and angular dimensions		
Machined with cutting tools (does not include sawing)	ISO 2768-1-m	
Machined with non cutting tools (includes sawing)	ISO 2768-1-v	
Broken edges and angular dimensions	ISO 2768-1-c	

School subject: CAD1/CAD2	Scale: 1:1	Created by: Jorgen Nilsson	Approved by:
PERSTORP TEKNISKA GYMNASIUM		Document type: FUSION 360 Drawing	Approved date:
First angle projection		Title: B45 Modeling exercise	DWG No.: PG-24178 R150
			Rev.: 0 / Date of issue: 2024-04-25 / Sheet: 1/1

This drawing is Perstorp Tekniska Gymnasium property and is protected according to existing law and may not without our approval be copied, imparted anyone or used without authorization

Revision history			
Rev.	Description	Created by	Rev. date

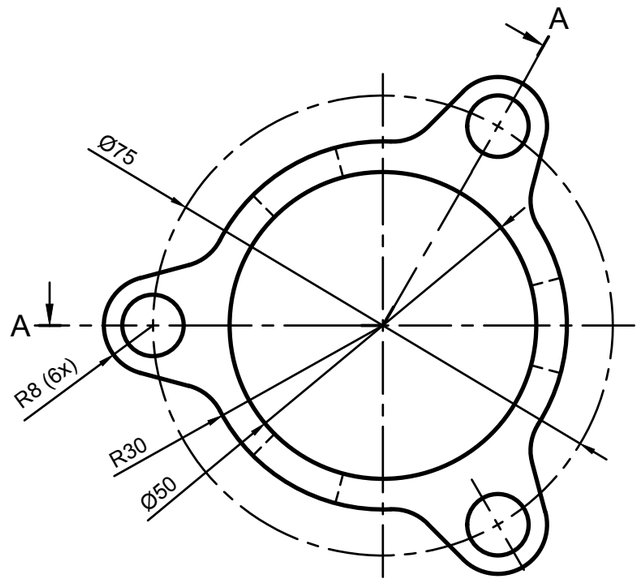

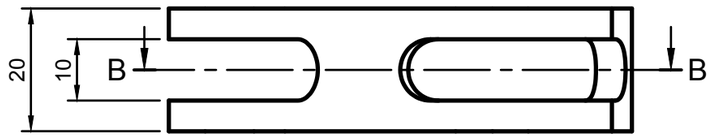

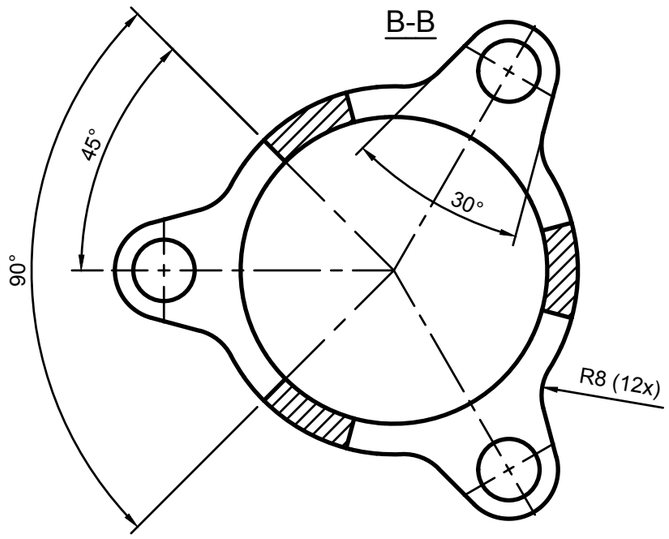

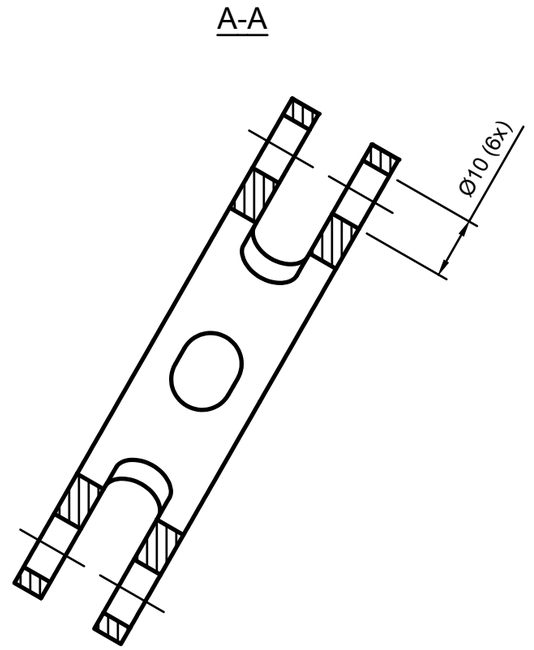



Item	Qty	Part Number	Material	Mass
1	1	B46	Al 4120	0.04 kg

Parts List

General Tolerances		
Weld constr. ISO 5817 Class C	Castings ISO 8062 CT12	Threads ISO 965 6H/6g
Linear and angular dimensions		
Machined with cutting tools (does not include sawing)	ISO 2768-1-m	
Machined with non cutting tools (includes sawing)	ISO 2768-1-v	
Broken edges and angular dimensions	ISO 2768-1-c	

School subject: CAD1/CAD2	Scale: 1:1	Created by: Jorgen Nilsson	Approved by:
PERSTORP TEKNISKA GYMNASIUM		Document type: FUSION 360 Drawing	Approved date:
First angle projection		Title: B46 Modeling exercise	DWG No.: PG-24179
			Rev.: 0 / Date of issue: 2024-04-25 / Sheet: 1/1

This drawing is Perstorp Tekniska Gymnasium property and is protected according to existing law and may not without our approval be copied, imparted anyone or used without authorization

Revision history			
Rev.	Description	Created by	Rev. date

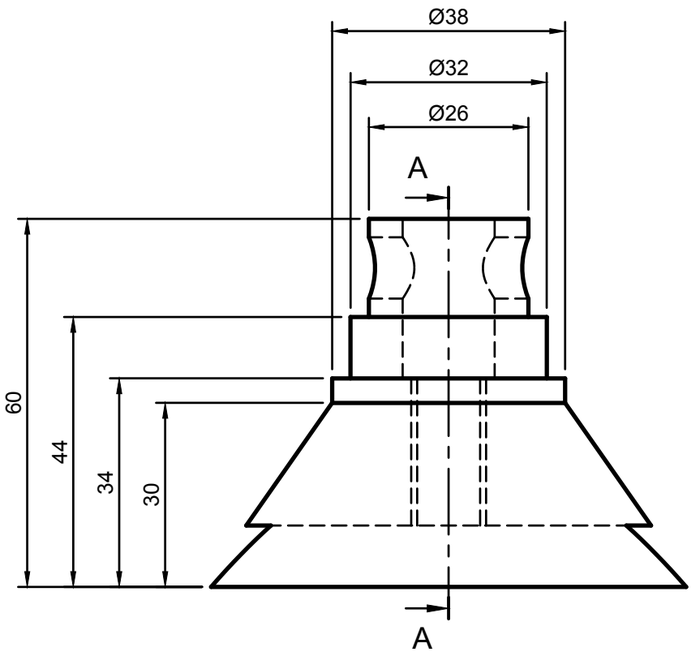

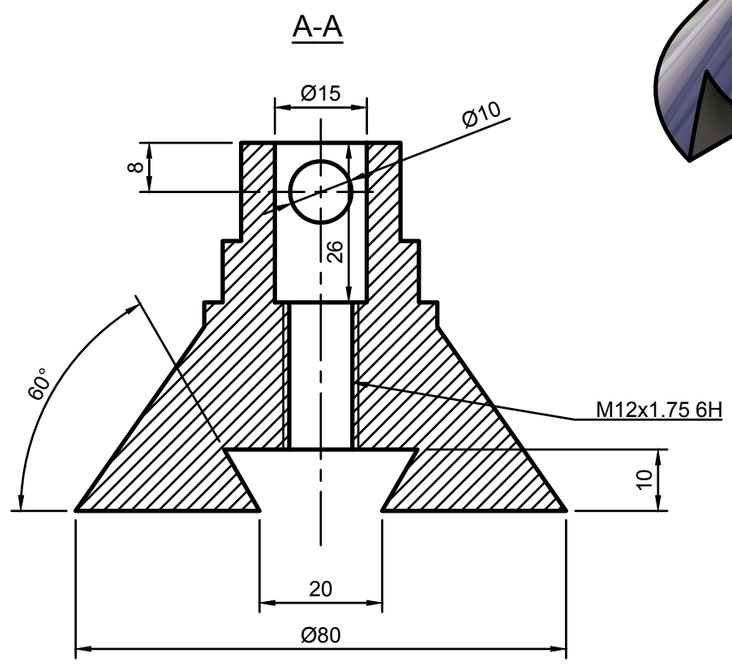

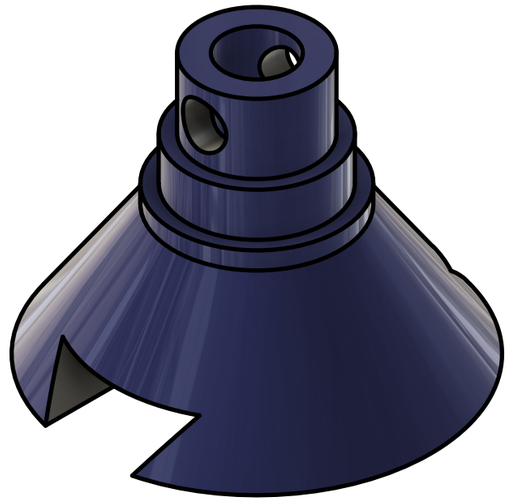

Item	Qty	Part Number	Material	Mass
1	1	B47	34CrMoNi6	0.63 kg

Parts List

General Tolerances		
Weld constr. ISO 5817 Class C	Castings ISO 8062 CT12	Threads ISO 965 6H/6g
Linear and angular dimensions		
Machined with cutting tools (does not include sawing)	ISO 2768-1-m	
Machined with non cutting tools (includes sawing)	ISO 2768-1-v	
Broken edges and angular dimensions	ISO 2768-1-c	

School subject: CAD1/CAD2	Scale: 1:1	Created by: Jorgen Nilsson	Approved by:
PERSTORP TEKNISKA GYMNASIUM		Document type: FUSION 360 Drawing	Approved date:
First angle projection		Title: B47 Modeling exercise	DWG No.: PG-24189
			Rev.: 0 / Date of issue: 2024-04-27 / Sheet: 1/1

This drawing is Perstorp Tekniska Gymnasium property and is protected according to existing law and may not without our approval be copied, imparted anyone or use or used without authorization

Revision history			
Rev.	Description	Created by	Rev. date

A-A

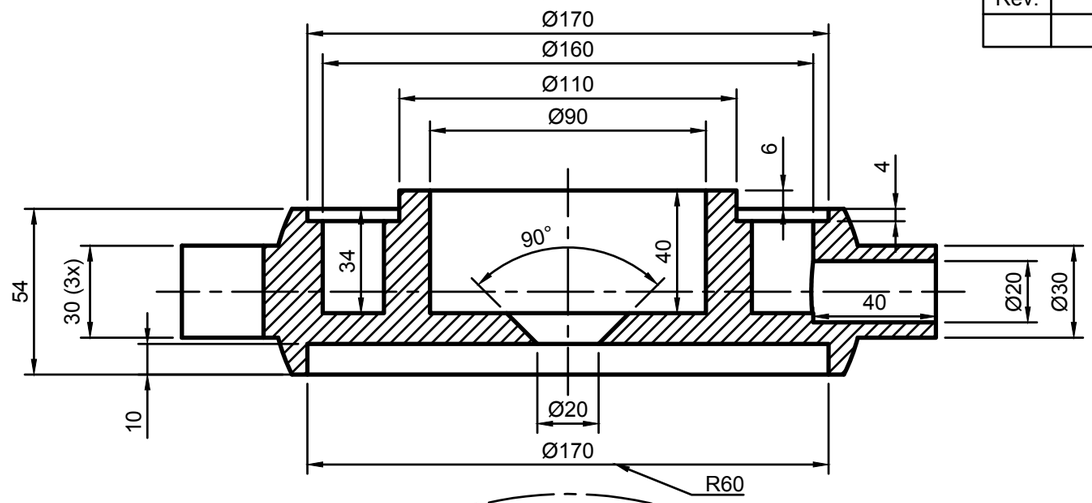

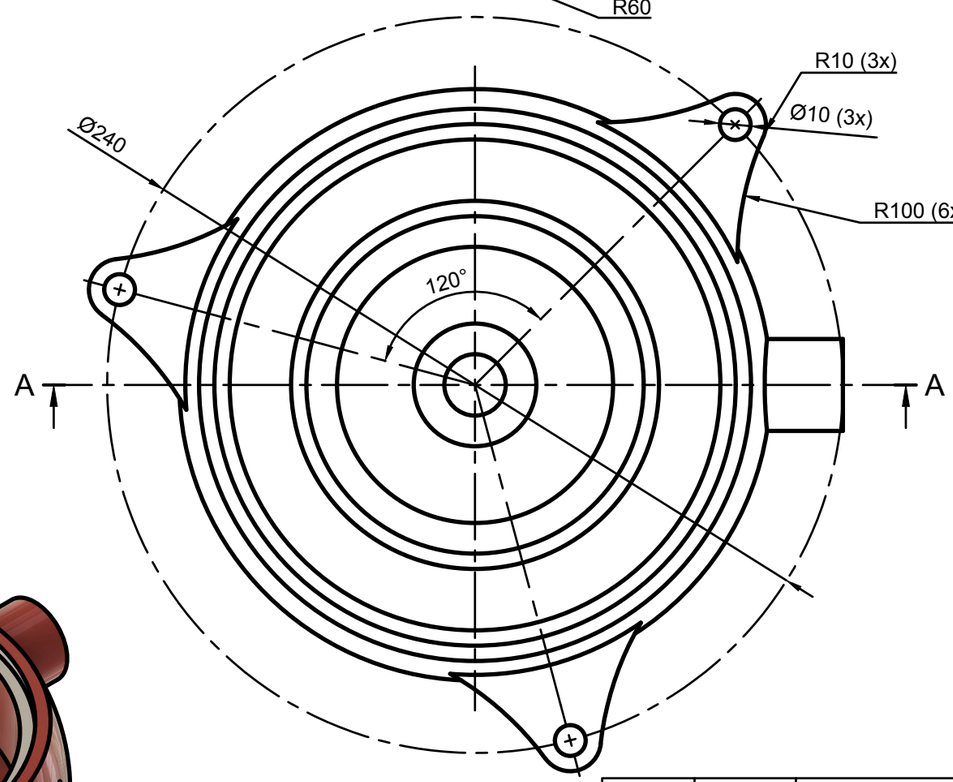

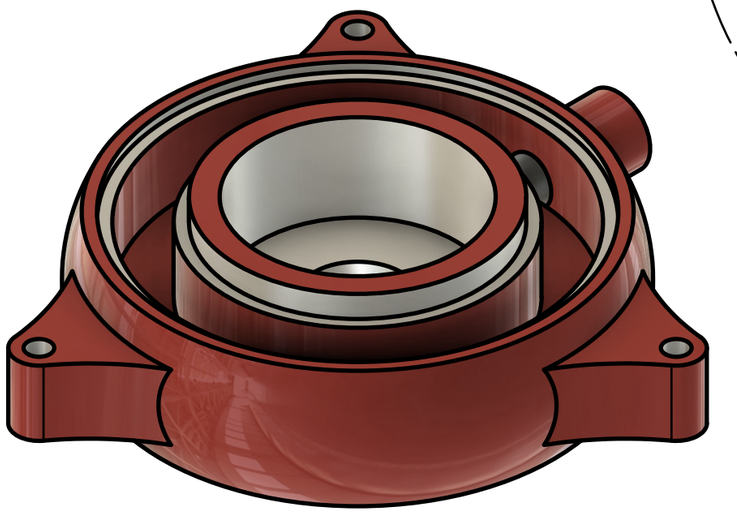

Item	Qty	Part Number	Material	Mass
1	1	B48	Al 4120	2.31 kg

Parts List

General Tolerances		
Weld constr. ISO 5817 Class C	Castings ISO 8062 CT12	Threads ISO 965 6H/6g
Linear and angular dimensions		
Machined with cutting tools (does not include sawing)	ISO 2768-1-m	
Machined with non cutting tools (includes sawing)	ISO 2768-1-v	
Broken edges and angular dimensions	ISO 2768-1-c	

School subject: CAD1/CAD2	Scale: 1:2	Created by: Jorgen Nilsson	Approved by:
PERSTORP TEKNISKA GYMNASIUM		Document type: FUSION 360 Drawing	Approved date:
First angle projection		Title: B48 Modeling exercise	DWG No.: PG-242192
			Rev.: 0 / Date of issue: 2024-04-28 / Sheet: 1/1

This drawing is Perstorp Tekniska Gymnasium property and is protected according to existing law and may not without our approval be copied, imparted anyone or used without authorization

Revision history			
Rev.	Description	Created by	Rev. date

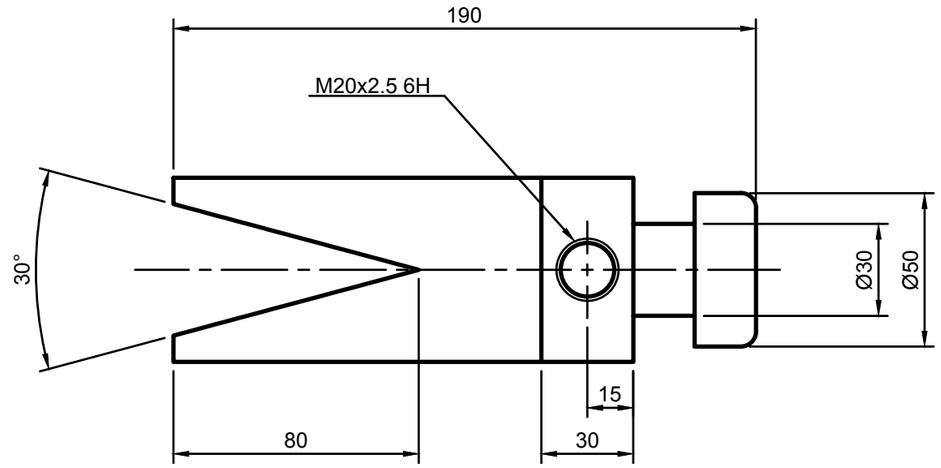



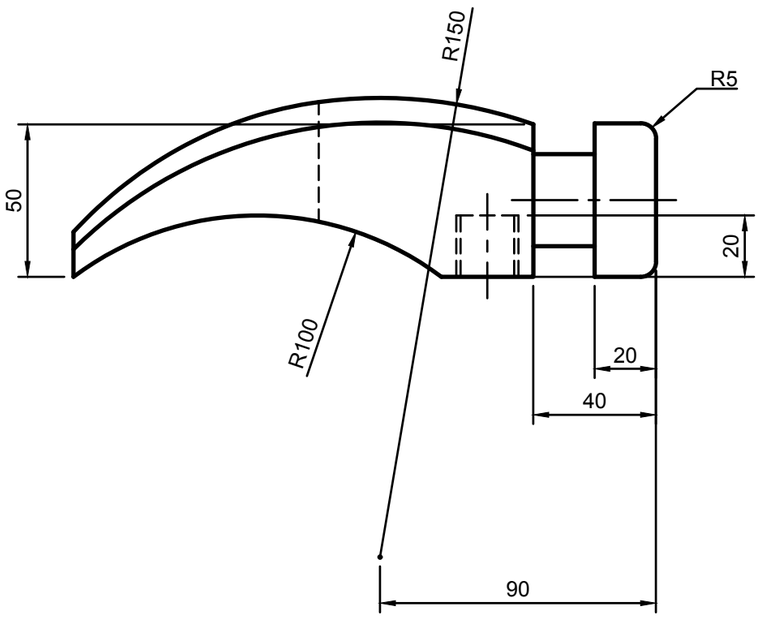

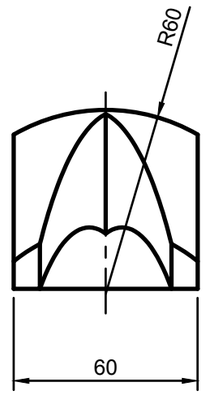

Item	Qty	Part Number	Material	Mass
1	1	B49	S355J2G3	2.57 kg

Parts List

General Tolerances		
Weld constr. ISO 5817 Class C	Castings ISO 8062 CT12	Threads ISO 965 6H/6g
Linear and angular dimensions		
Machined with cutting tools (does not include sawing)	ISO 2768-1-m	
Machined with non cutting tools (includes sawing)	ISO 2768-1-v	
Broken edges and angular dimensions	ISO 2768-1-c	

School subject: CAD1/CAD2	Scale: 1:2	Created by: Jorgen Nilsson	Approved by:
PERSTORP TEKNISKA GYMNASIUM		Document type: FUSION 360 Drawing	Approved date:
First angle projection		Title: B49 Modeling exercise	DWG No.: PG-24180
			Rev.: 0 / Date of issue: 2024-04-25 / Sheet: 1/1

This drawing is Perstorp Tekniska Gymnasium property and is protected according to existing law and may not without our approval be copied, imparted anyone or used without authorization

Revision history			
Rev.	Description	Created by	Rev. date

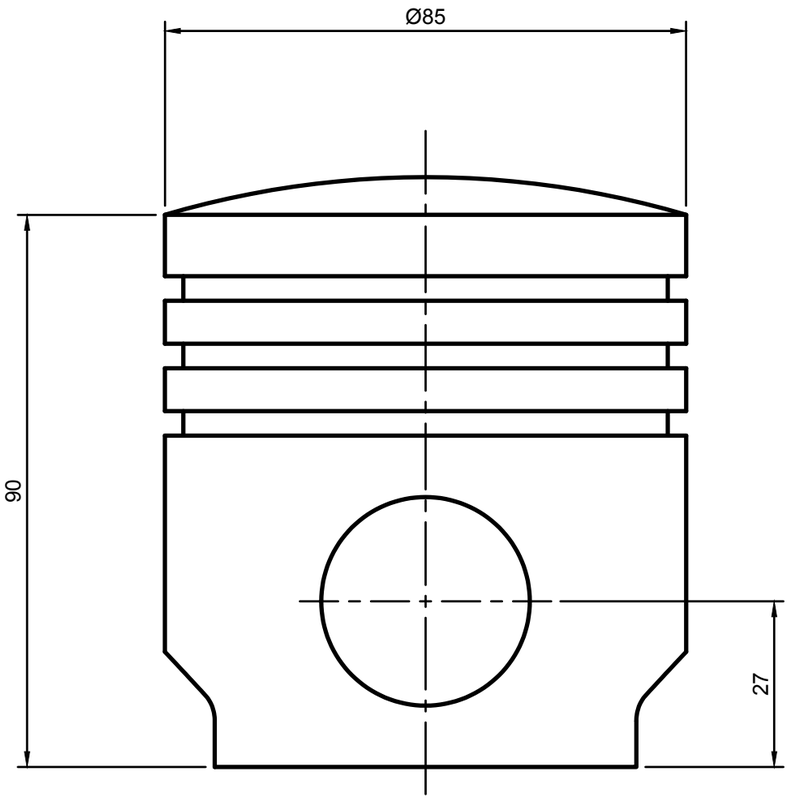

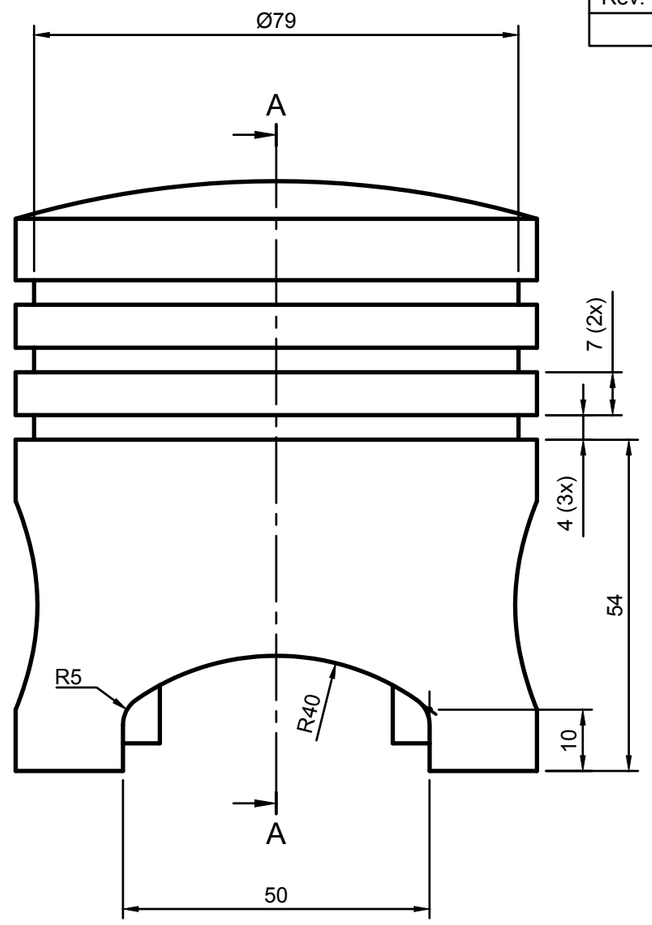

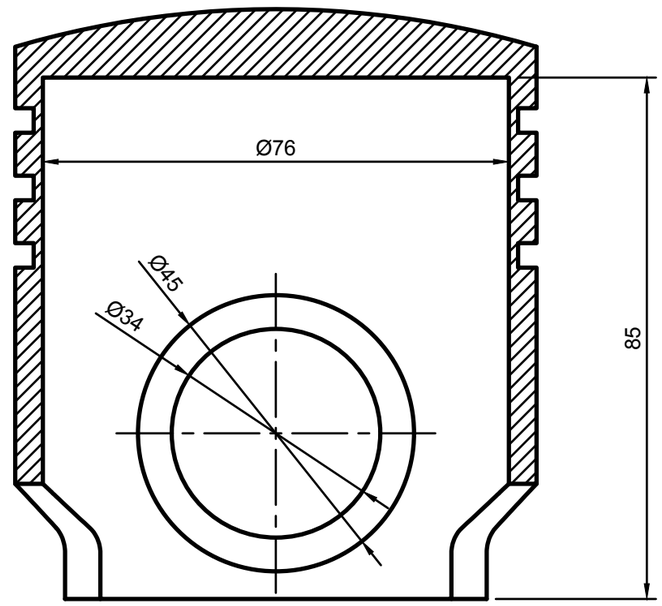

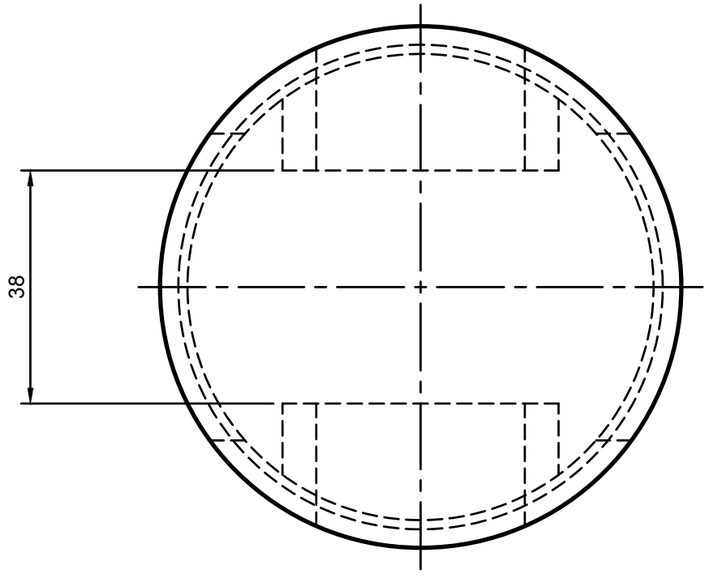

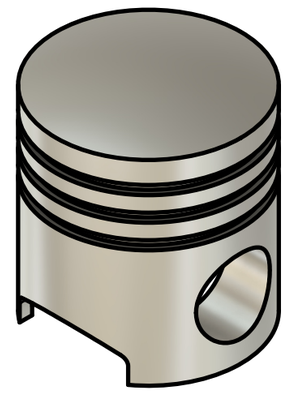

Item	Qty	Part Number	Material	Mass
1	1	B50	Al 4120	0.38 kg

Parts List

General Tolerances		
Weld constr. ISO 5817 Class C	Castings ISO 8062 CT12	Threads ISO 965 6H/6g
Linear and angular dimensions		
Machined with cutting tools (does not include sawing)	ISO 2768-1-m	
Machined with non cutting tools (includes sawing)	ISO 2768-1-v	
Broken edges and angular dimensions	ISO 2768-1-c	

School subject: CAD1/CAD2	Scale: 1:1	Created by: Jorgen Nilsson	Approved by:
PERSTORP TEKNISKA GYMNASIUM		Document type: FUSION 360 Drawing	Approved date:
First angle projection		Title: B50 Modeling exercise	DWG No.: PG-24181
			Rev.: 0 / Date of issue: 2024-04-25 / Sheet: 1/1

This drawing is Perstorp Tekniska Gymnasium property and is protected according to existing law and may not without our approval be copied, imparted anyone or used without authorization

Revision history			
Rev.	Description	Created by	Rev. date

C (2:1)

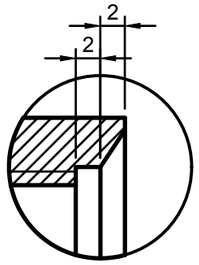

A-A

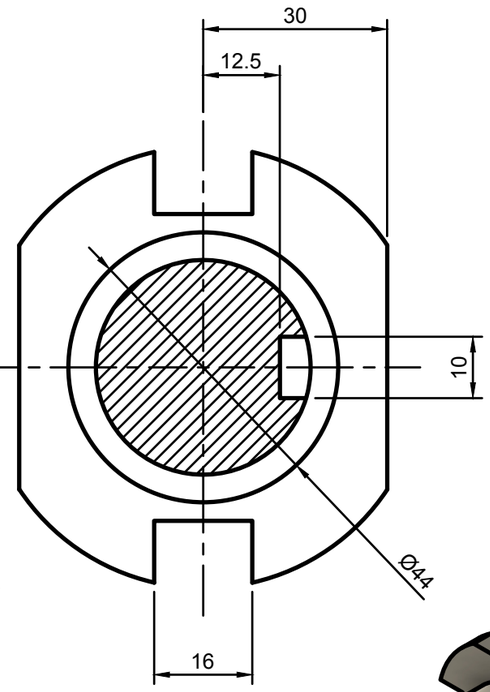

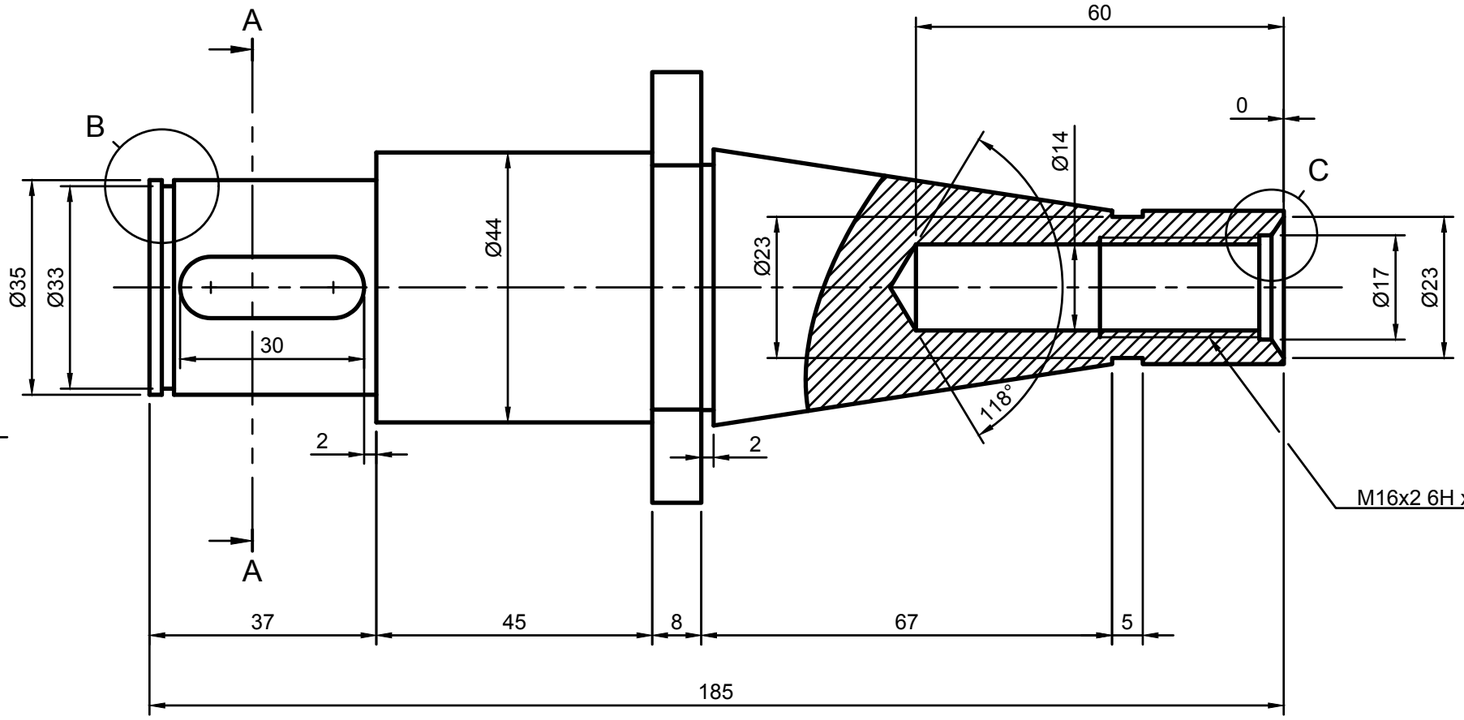

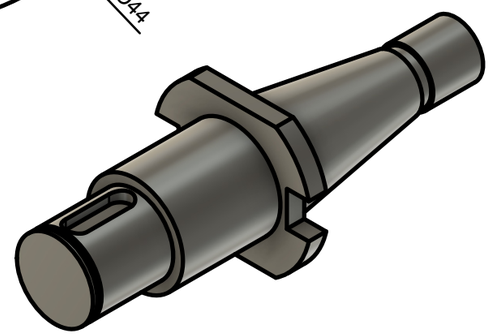

B (2:1)

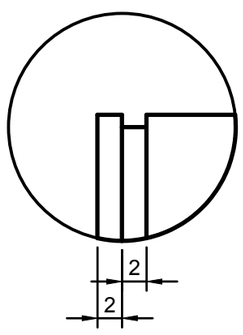

Item	Qty	Part Number	Material	Mass
1	1	B51	Stainless 1.4401	1.57 kg

Parts List

General Tolerances		
Weld constr. ISO 5817 Class C	Castings ISO 8062 CT12	Threads ISO 965 6H/6g
Linear and angular dimensions		
Machined with cutting tools (does not include sawing)	ISO 2768-1-m	
Machined with non cutting tools (includes sawing)	ISO 2768-1-v	
Broken edges and angular dimensions	ISO 2768-1-c	

School subject: CAD1/CAD2	Scale: 1:1	Created by: Jorgen Nilsson	Approved by:
PERSTORP TEKNISKA GYMNASIUM		Document type: FUSION 360 Drawing	Approved date:
First angle projection		Title: B51 Modeling exercise	DWG No.: PG-24182
			Rev.: 0 / Date of issue: 2024-04-26 / Sheet: 1/1

This drawing is Perstorp Tekniska Gymnasium property and is protected according to existing law and may not without our approval be copied, imparted anyone or used without authorization

Revision history			
Rev.	Description	Created by	Rev. date

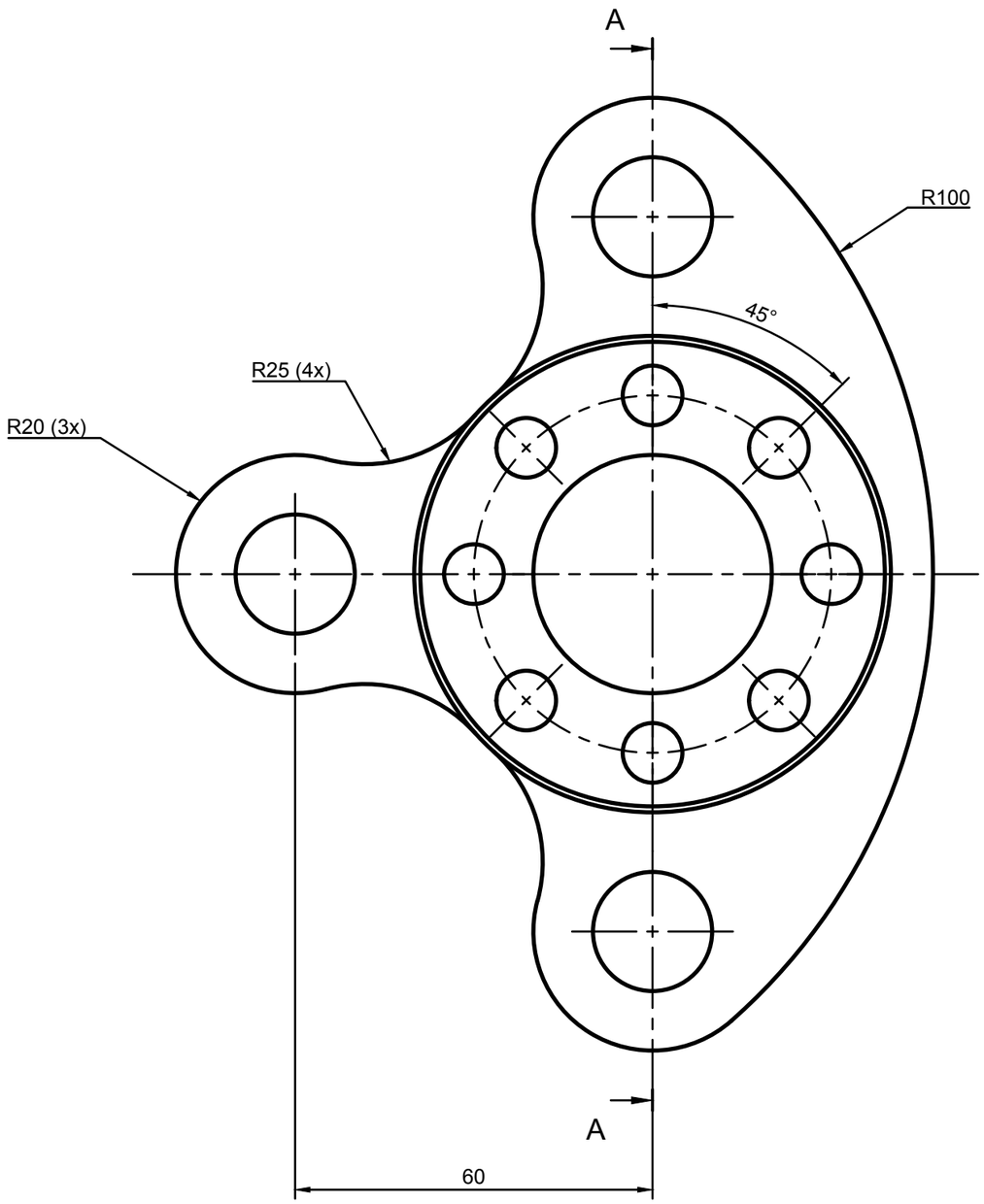

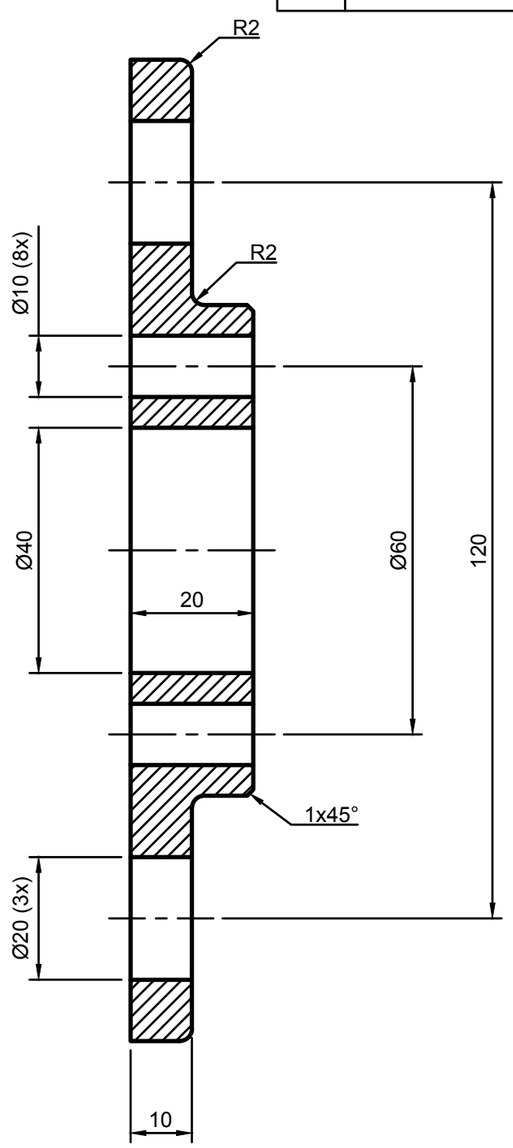

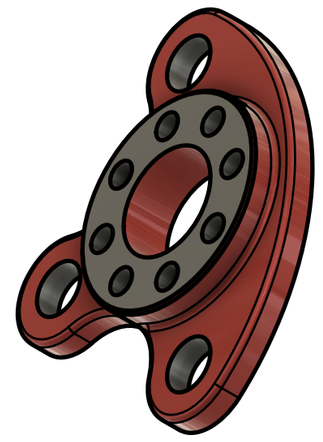

Item	Qty	Part Number	Material	Mass
1	1	B52	S355J2G3	0.89 kg

Parts List

General Tolerances		
Weld constr. ISO 5817 Class C	Castings ISO 8062 CT12	Threads ISO 965 6H/6g
Linear and angular dimensions		
Machined with cutting tools (does not include sawing)	ISO 2768-1-m	
Machined with non cutting tools (includes sawing)	ISO 2768-1-v	
Broken edges and angular dimensions	ISO 2768-1-c	

School subject: CAD1/CAD2	Scale: 1:1	Created by: Jorgen Nilsson	Approved by:
PERSTORP TEKNISKA GYMNASIUM		Document type: FUSION 360 Drawing	Approved date:
First angle projection		Title: B52 Modeling exercise	DWG No.: PG-24183
			Rev.: 0 / Date of issue: 2024-04-26 / Sheet: 1/1

This drawing is Perstorp Tekniska Gymnasium property and is protected according to existing law and may not without our approval be copied, imparted anyone or used without authorization

Revision history			
Rev.	Description	Created by	Rev. date

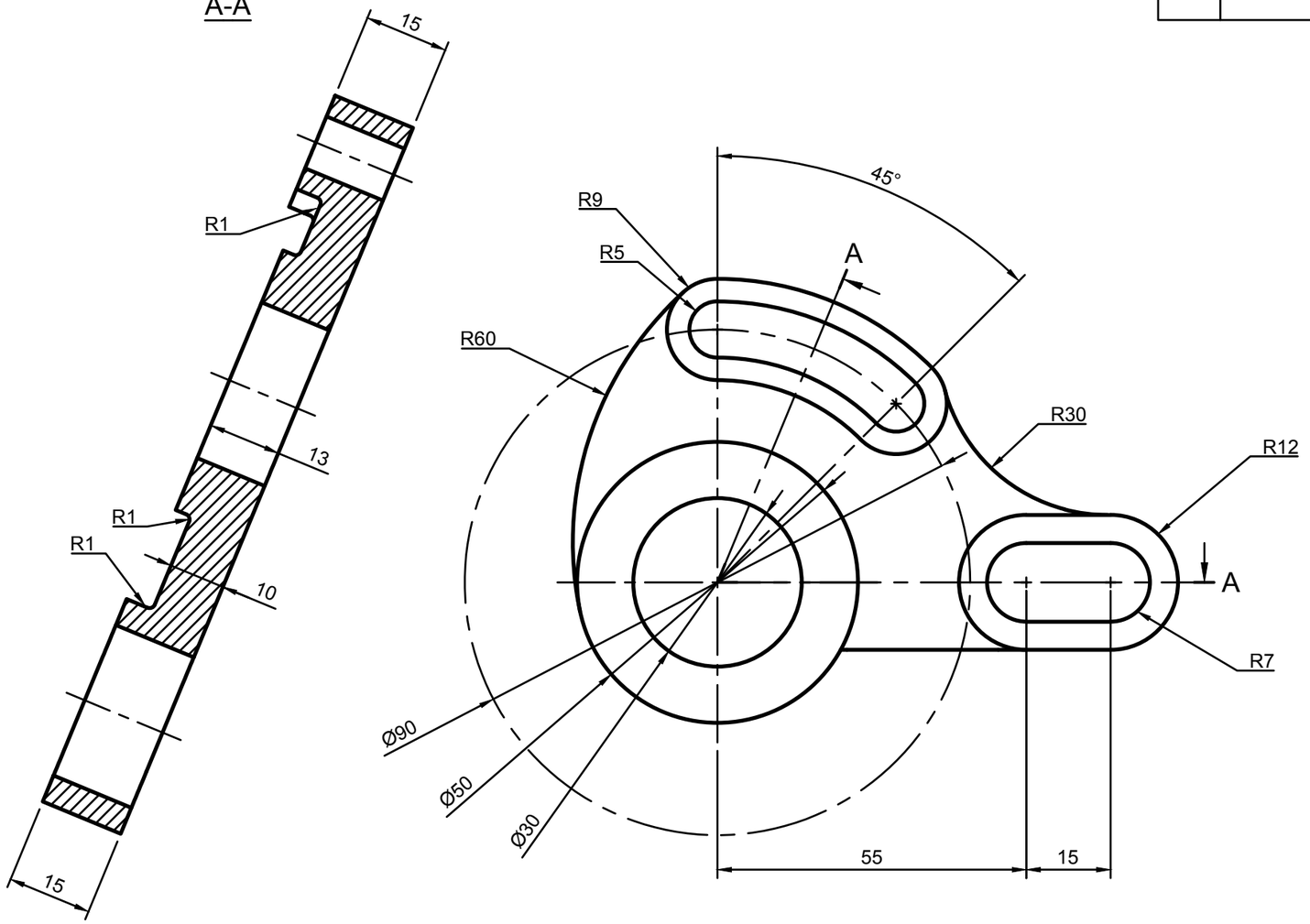



Item	Qty	Part Number	Material	Mass
1	1	B53	S255J2G3	0.36 kg

Parts List

General Tolerances		
Weld constr. ISO 5817 Class C	Castings ISO 8062 CT12	Threads ISO 965 6H/6g
Linear and angular dimensions		
Machined with cutting tools (does not include sawing)		ISO 2768-1-m
Machined with non cutting tools (includes sawing)		ISO 2768-1-v
Broken edges and angular dimensions		ISO 2768-1-c

School subject: CAD1/CAD2	Scale: 1:1	Created by: Jorgen Nilsson	Approved by:
PERSTORP TEKNISKA GYMNASIUM		Document type: FUSION 360 Drawing	Approved date:
First angle projection		Title: B53 Modeling exercise	DWG No.: PG-24184
			Rev.: 0 / Date of issue: 2024-04-26 / Sheet: 1/1

This drawing is Perstorp Tekniska Gymnasium property and is protected according to existing law and may not without our approval be copied, imparted anyone or use or used without authorization

Revision history			
Rev.	Description	Created by	Rev. date

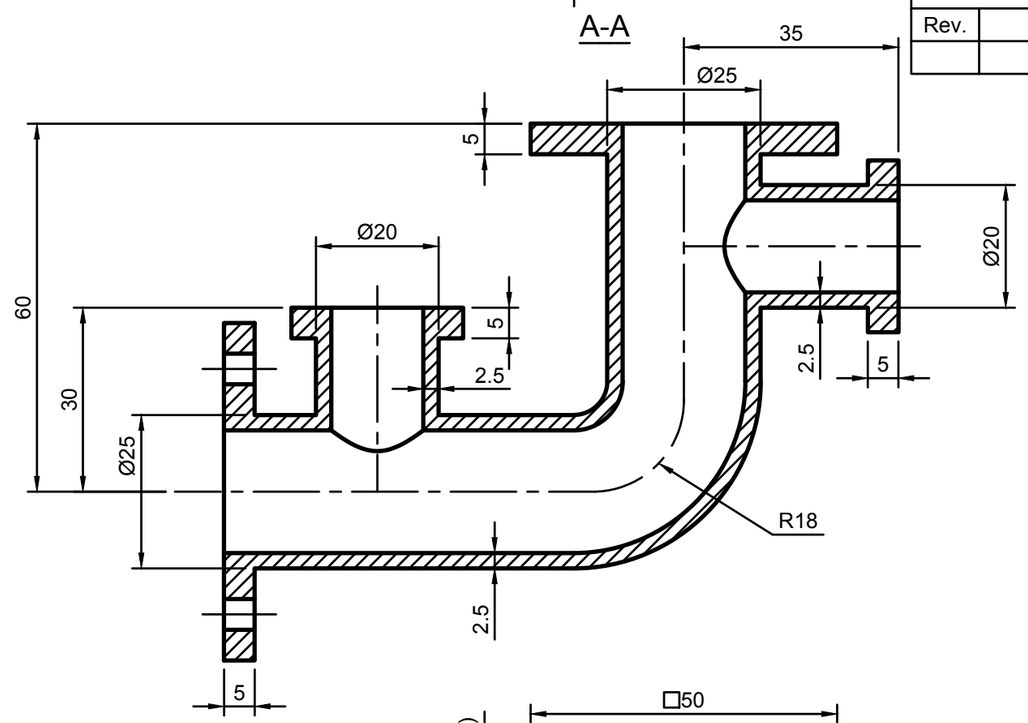

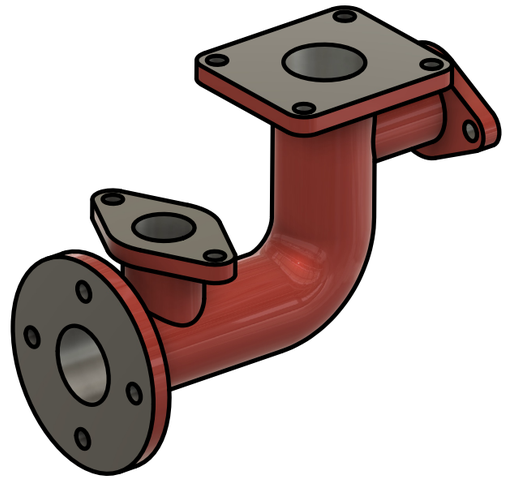

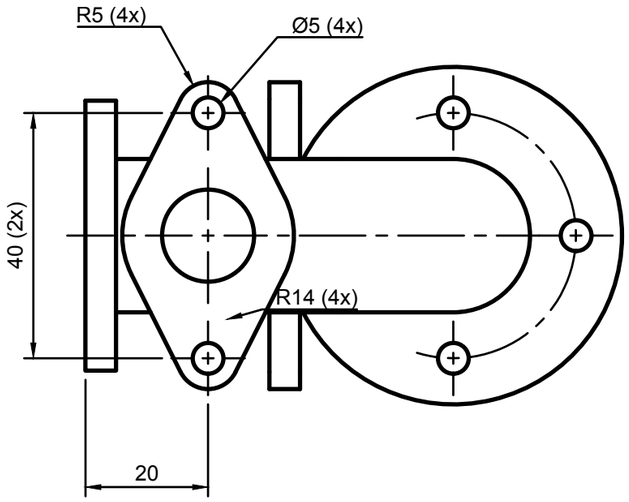

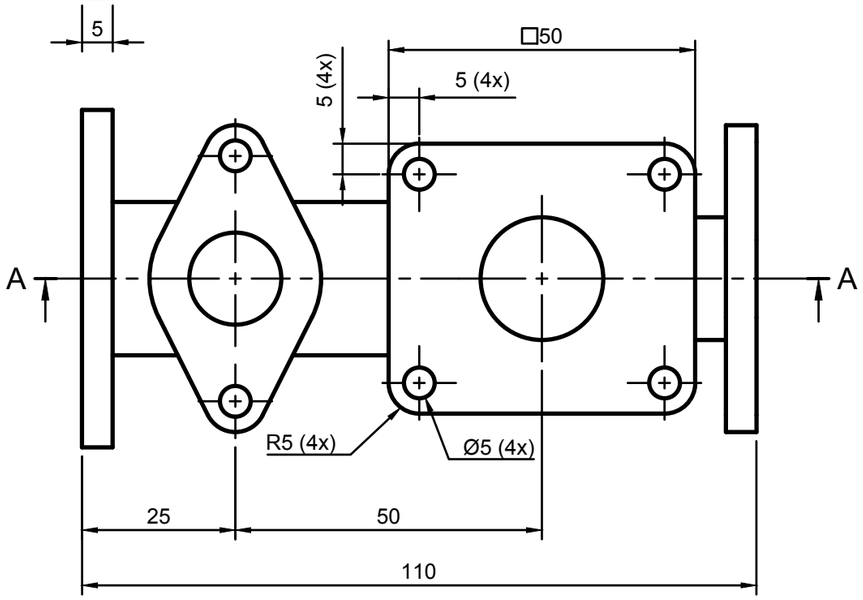

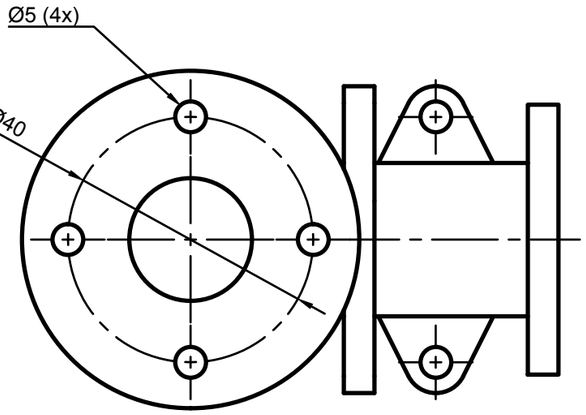

Item	Qty	Part Number	Material	Mass
1	1	B54	34NiCrMo6	0.39 kg

Parts List

General Tolerances		
Weld constr. ISO 5817 Class C	Castings ISO 8062 CT12	Threads ISO 965 6H/6g
Linear and angular dimensions		
Machined with cutting tools (does not include sawing)	ISO 2768-1-m	
Machined with non cutting tools (includes sawing)	ISO 2768-1-v	
Broken edges and angular dimensions	ISO 2768-1-c	

School subject: CAD1/CAD2	Scale: 1:1	Created by: Jorgen Nilsson	Approved by:
PERSTORP TEKNISKA GYMNASIUM		Document type: FUSION 360 Drawing	Approved date:
First angle projection		Title: B54 Modeling exercise	DWG No.: PG-24185
			Rev.: 0 / Date of issue: 2024-04-26 / Sheet: 1/1

This drawing is Perstorp Tekniska Gymnasium property and is protected according to existing law and may not without our approval be copied, imparted anyone or used without authorization

Revision history			
Rev.	Description	Created by	Rev. date

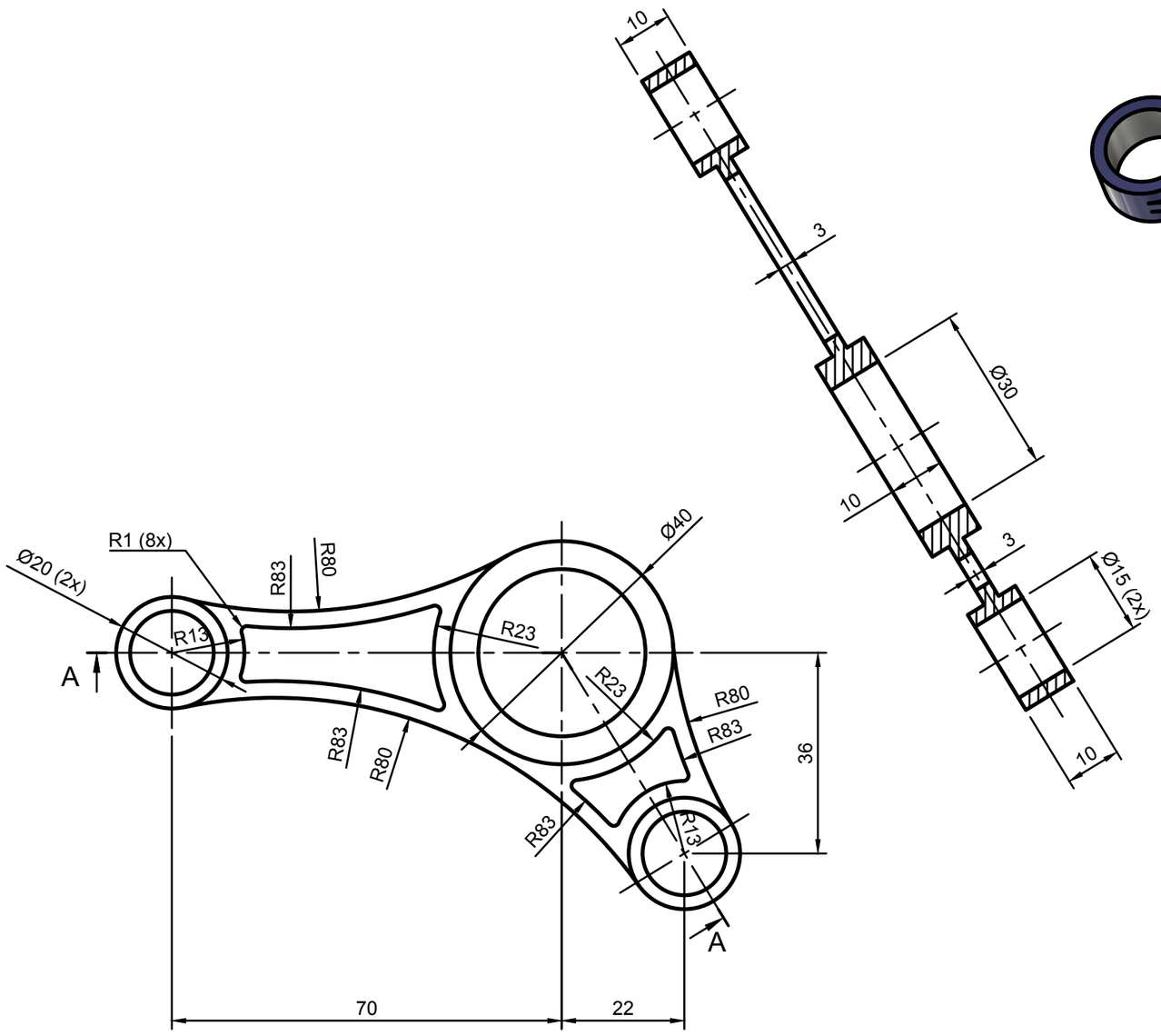

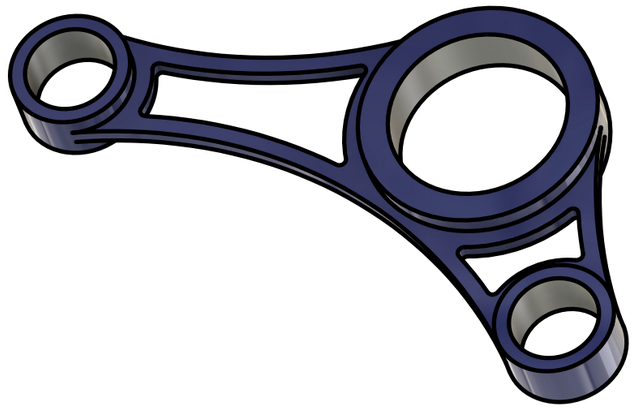

Item	Qty	Part Number	Material	Mass
1	1	B55	S355J2G3	0.08 kg

Parts List

General Tolerances		
Weld constr. ISO 5817 Class C	Castings ISO 8062 CT12	Threads ISO 965 6H/6g
Linear and angular dimensions		
Machined with cutting tools (does not include sawing)	ISO 2768-1-m	
Machined with non cutting tools (includes sawing)	ISO 2768-1-v	
Broken edges and angular dimensions	ISO 2768-1-c	

School subject: CAD1/CAD2	Scale: 1:1	Created by: Jorgen Nilsson	Approved by:
PERSTORP TEKNISKA GYMNASIUM		Document type: FUSION 360 Drawing	Approved date:
First angle projection		Title: B55 Modeling exercise	DWG No.: PG-24186
			Rev.: 0 / Date of issue: 2024-04-26 / Sheet: 1/1

This drawing is Perstorp Tekniska Gymnasium property and is protected according to existing law and may not without our approval be copied, imparted anyone or used without authorization

Revision history			
Rev.	Description	Created by	Rev. date

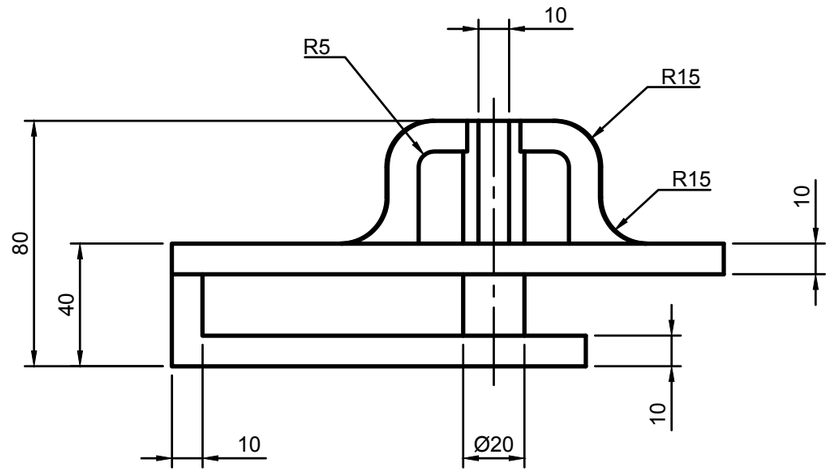

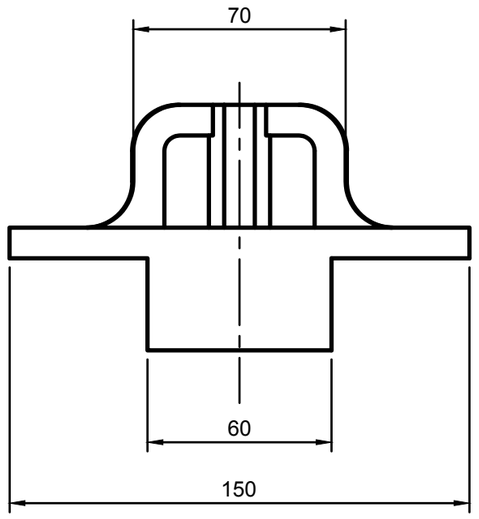

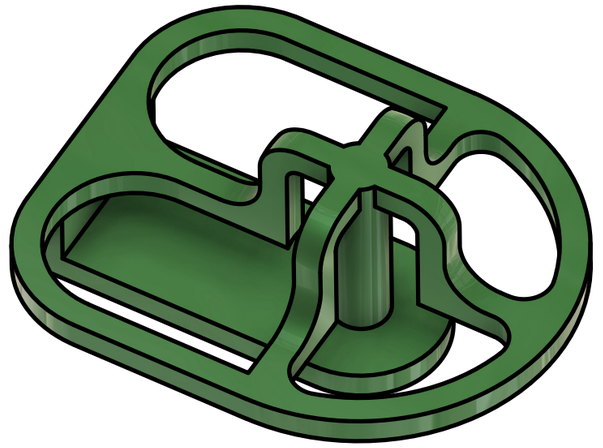

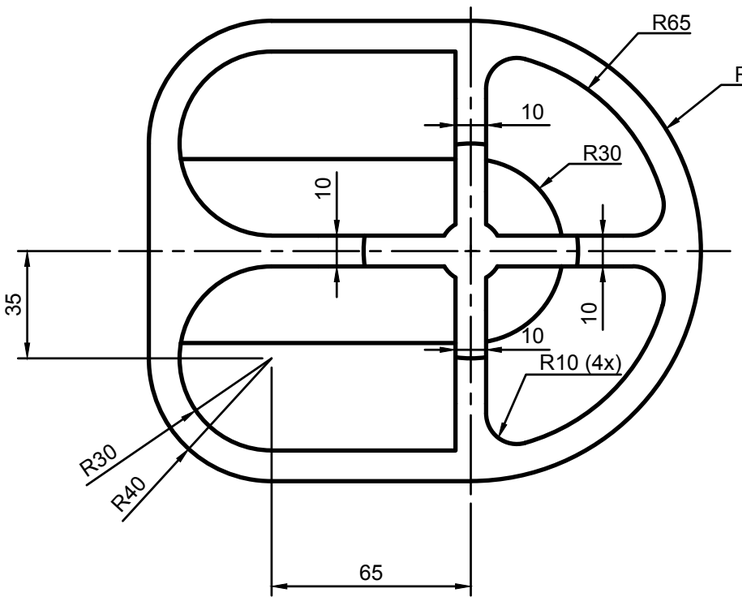

Item	Qty	Part Number	Material	Mass
1	1	B56	Plastic PETG	0.27 kg

Parts List

General Tolerances		
Weld constr. ISO 5817 Class C	Castings ISO 8062 CT12	Threads ISO 965 6H/6g
Linear and angular dimensions		
Machined with cutting tools (does not include sawing)	ISO 2768-1-m	
Machined with non cutting tools (includes sawing)	ISO 2768-1-v	
Broken edges and angular dimensions	ISO 2768-1-c	

School subject: CAD1/CAD2	Scale: 1:2	Created by: Jorgen Nilsson	Approved by:
PERSTORP TEKNISKA GYMNASIUM		Document type: FUSION 360 Drawing	Approved date:
First angle projection		Title: B56 Modeling exercise	DWG No.: PG-24188
			Rev.: 0 / Date of issue: 2024-04-27 / Sheet: 1/1

This drawing is Perstorp Tekniska Gymnasium property and is protected according to existing law and may not without our approval be copied, imparted anyone or used without authorization

Revision history			
Rev.	Description	Created by	Rev. date

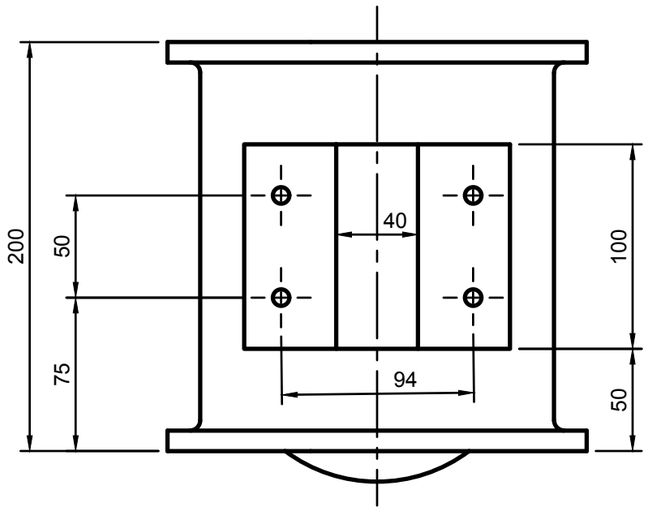

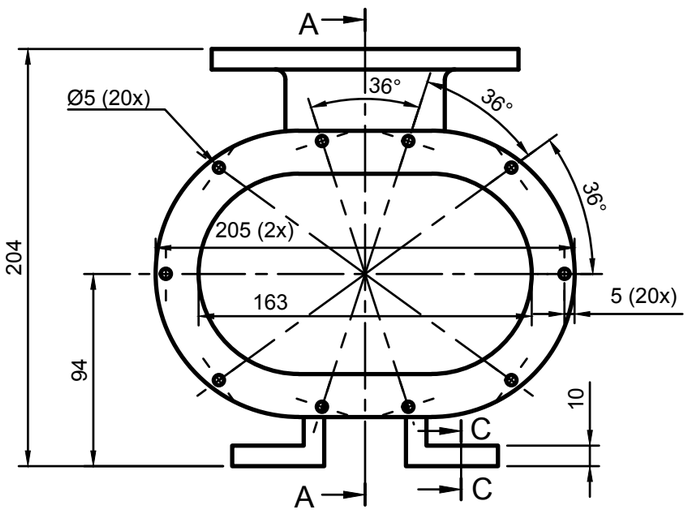

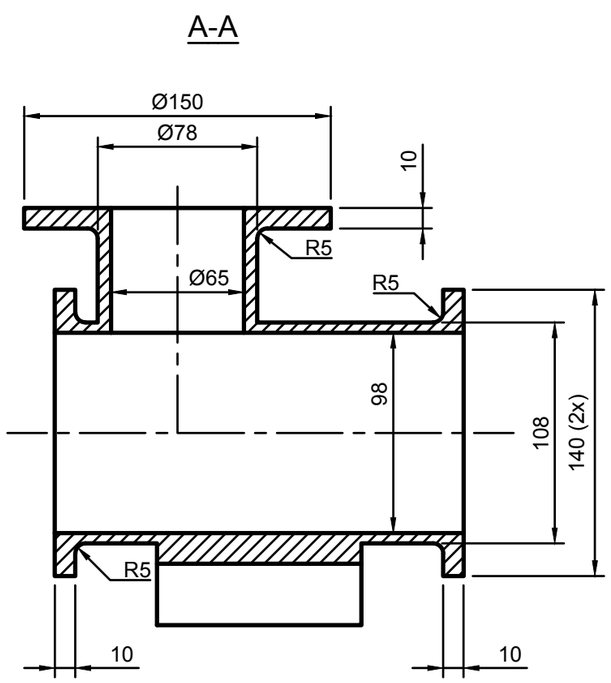

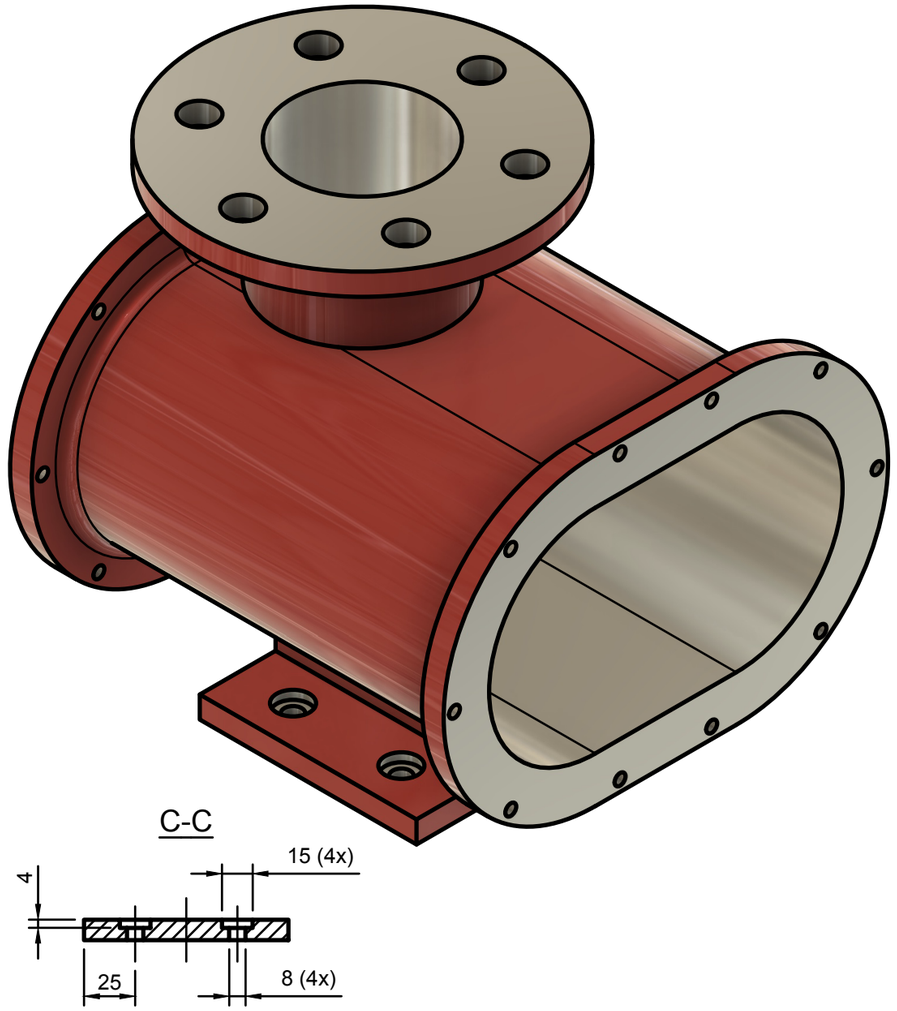

Item	Qty	Part Number	Material	Mass
1	1	B57	S355J2G3	7.79 kg

Parts List

General Tolerances		
Weld constr. ISO 5817 Class C	Castings ISO 8062 CT12	Threads ISO 965 6H/6g
Linear and angular dimensions		
Machined with cutting tools (does not include sawing)	ISO 2768-1-m	
Machined with non cutting tools (includes sawing)	ISO 2768-1-v	
Broken edges and angular dimensions	ISO 2768-1-c	

School subject: CAD1/CAD2	Scale: 1:3	Created by: Jorgen Nilsson	Approved by:
PERSTORP TEKNISKA GYMNASIUM		Document type: FUSION 360 Drawing	Approved date:
First angle projection		Title: B57 Modeling exercise	DWG No.: PG-24190
			Rev.: 0 / Date of issue: 2024-04-28 / Sheet: 1/1

This drawing is Perstorp Tekniska Gymnasium property and is protected according to existing law and may not without our approval be copied, imparted anyone or used without authorization

Revision history			
Rev.	Description	Created by	Rev. date

A-A

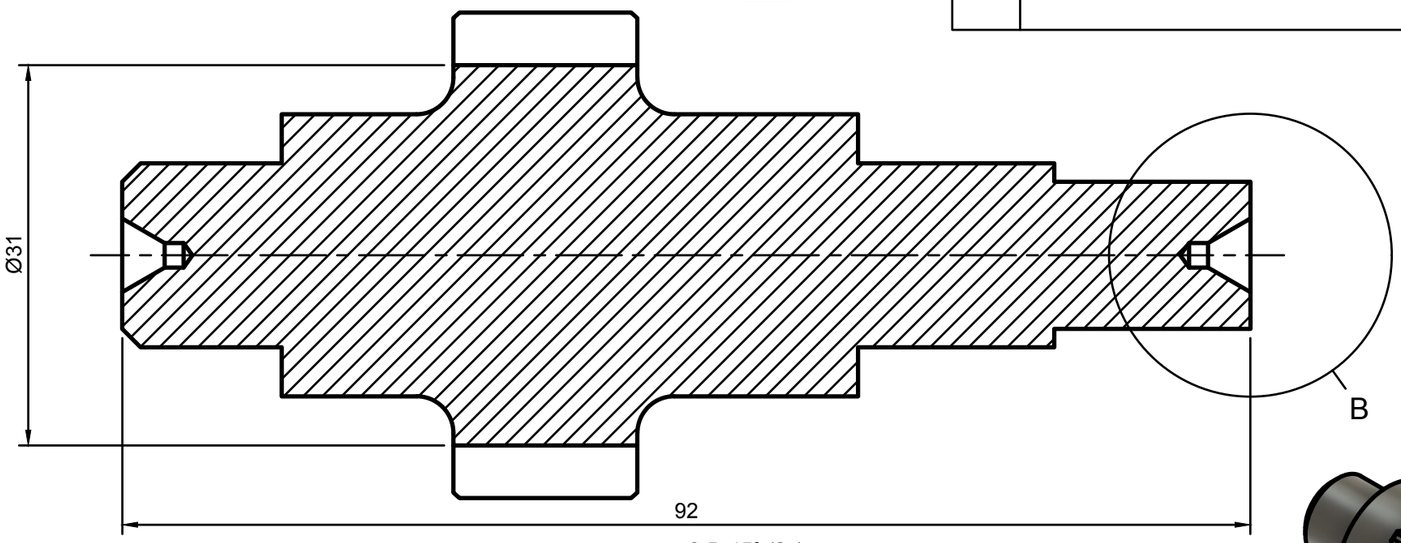

B (4:1) (2x)

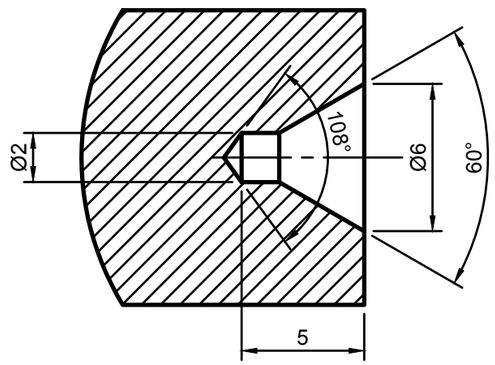

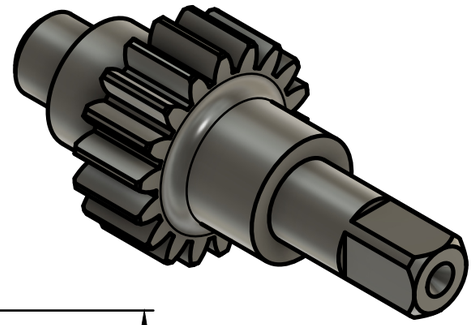

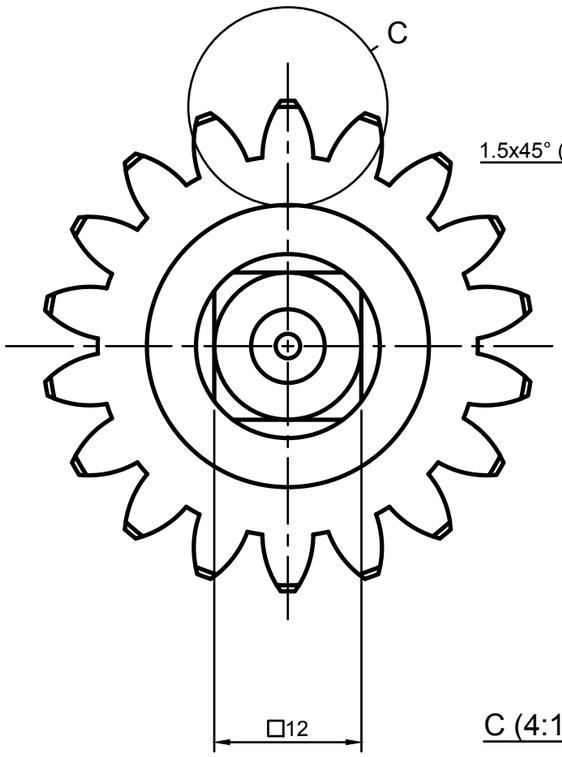

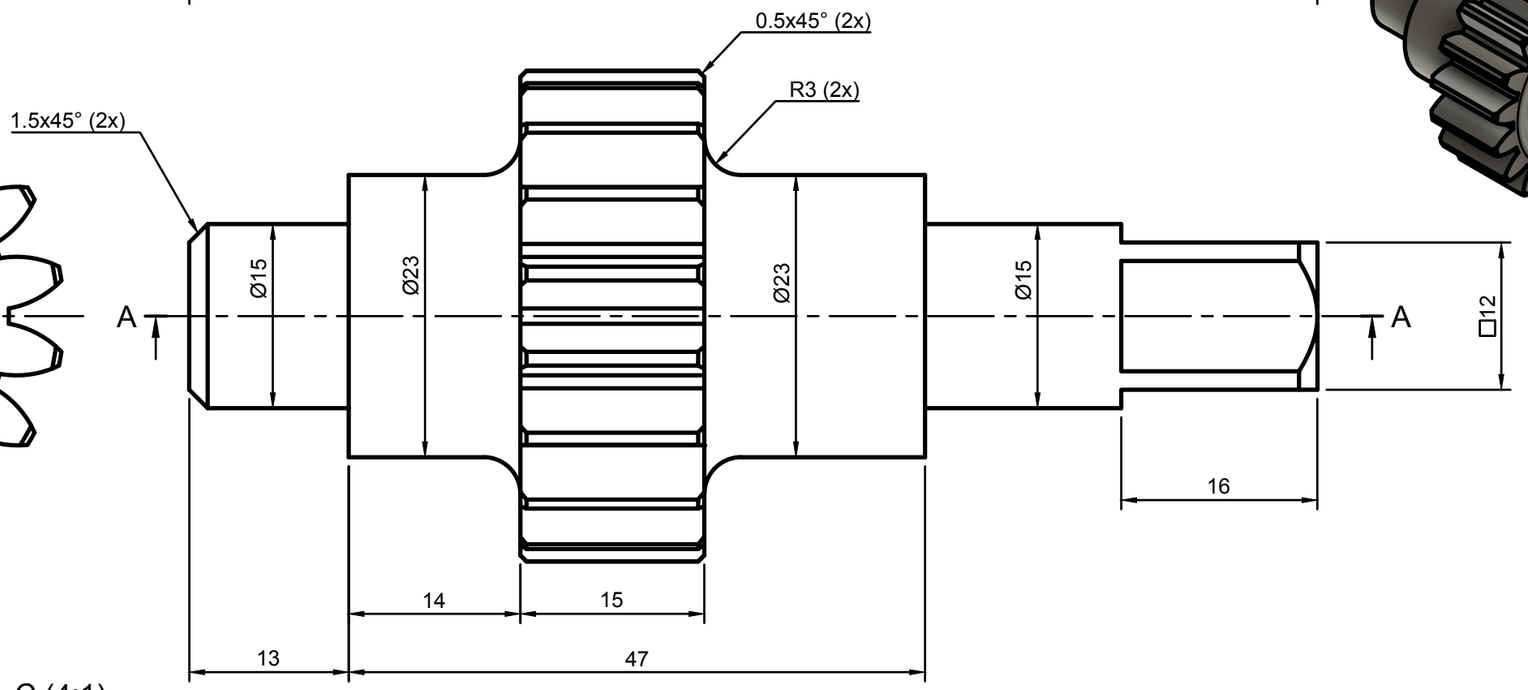

C (4:1)

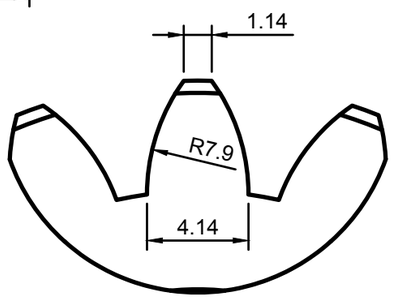

Item	Qty	Part Number	Material	Mass
1	1	B58	34NiCrMo6	0.28 kg

Parts List

General Tolerances		
Weld constr. ISO 5817 Class C	Castings ISO 8062 CT12	Threads ISO 965 6H/6g
Linear and angular dimensions		
Machined with cutting tools (does not include sawing)	ISO 2768-1-m	
Machined with non cutting tools (includes sawing)	ISO 2768-1-v	
Broken edges and angular dimensions	ISO 2768-1-c	

School subject: CAD1/CAD2	Scale: 2:1	Created by: Jorgen Nilsson	Approved by:
PERSTORP TEKNISKA GYMNASIUM		Document type: FUSION 360 Drawing	Approved date:
First angle projection		Title: B58 Modeling exercise	DWG No.: PG-24195
			Rev.: 0 / Date of issue: 2024-04-30 / Sheet: 1/1

This drawing is Perstorp Tekniska Gymnasium property and is protected according to existing law and may not without our approval be copied, imparted anyone or used without authorization

Revision history			
Rev.	Description	Created by	Rev. date

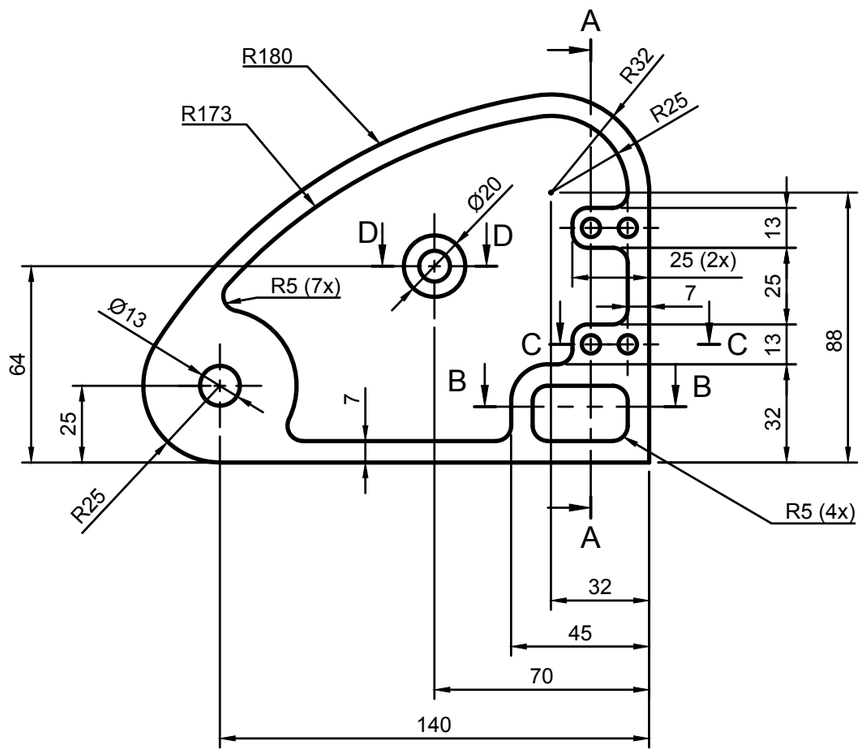

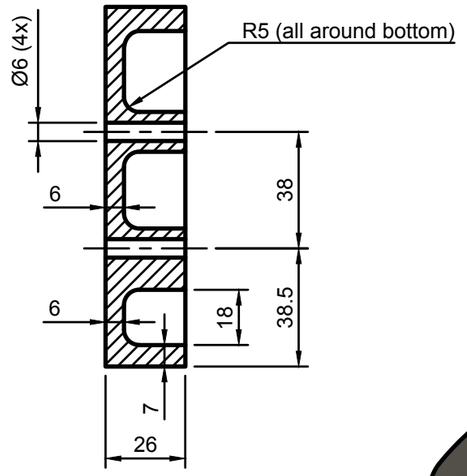

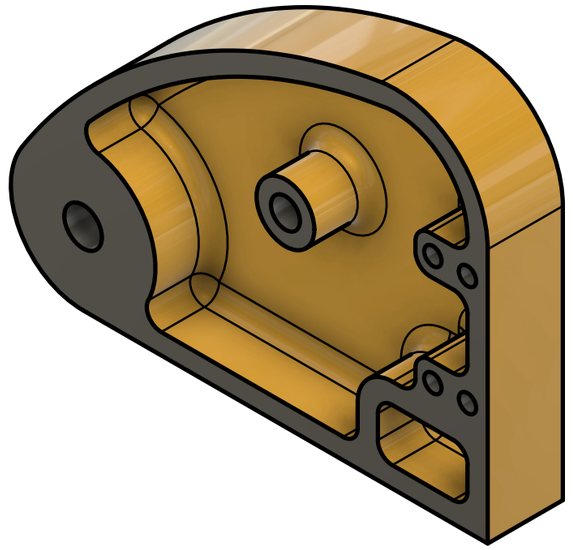

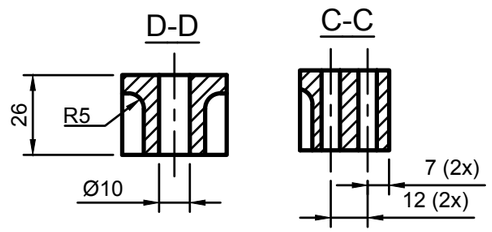

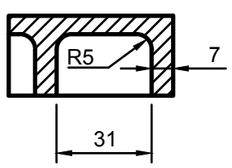

Item	Qty	Part Number	Material	Mass
1	1	B59	S355J2G3	1.63 kg

Parts List

General Tolerances		
Weld constr. ISO 5817 Class C	Castings ISO 8062 CT12	Threads ISO 965 6H/6g
Linear and angular dimensions		
Machined with cutting tools (does not include sawing)	ISO 2768-1-m	
Machined with non cutting tools (includes sawing)	ISO 2768-1-v	
Broken edges and angular dimensions	ISO 2768-1-c	

School subject: CAD1/CAD2	Scale: 1:2	Created by: Jorgen Nilsson	Approved by:
PERSTORP TEKNISKA GYMNASIUM		Document type: FUSION 360 Drawing	Approved date:
First angle projection		Title: B59 Modeling exercise	DWG No.: PG-23105
			Rev.: 0 / Date of issue: 2023-11-23 / Sheet: 1/1

This drawing is Perstorp Tekniska Gymnasium property and is protected according to existing law and may not without our approval be copied, imparted anyone or used without authorization

Revision history			
Rev.	Description	Created by	Rev. date

A-A

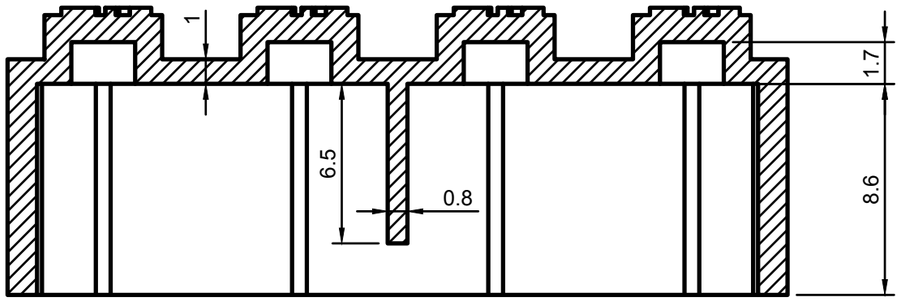

B (10:1)

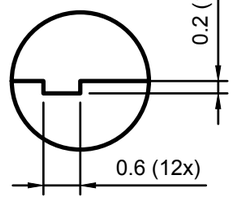

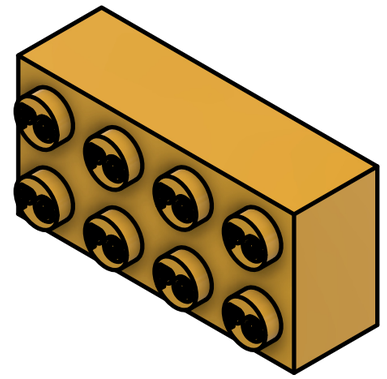

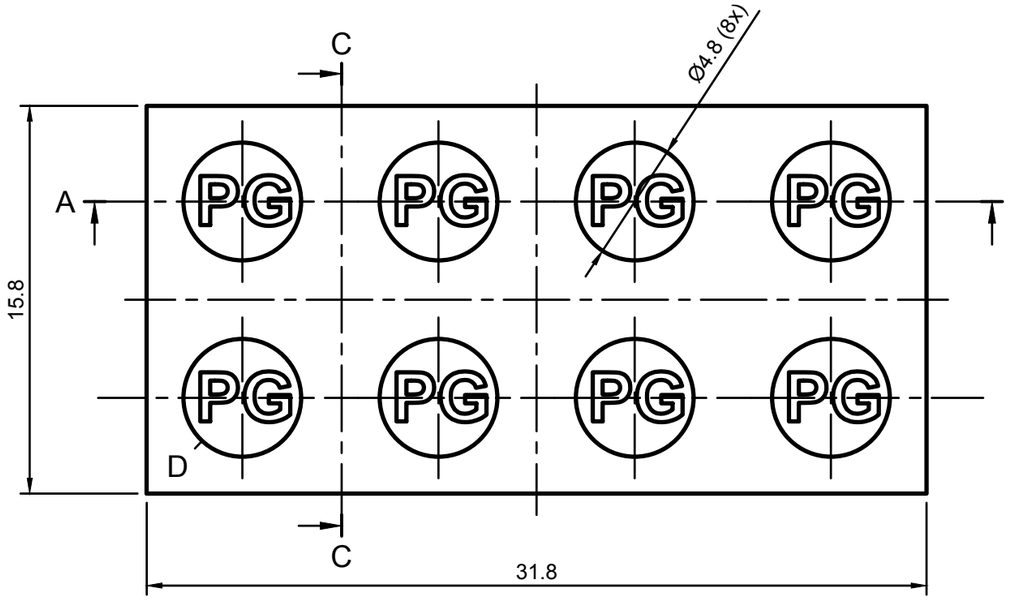

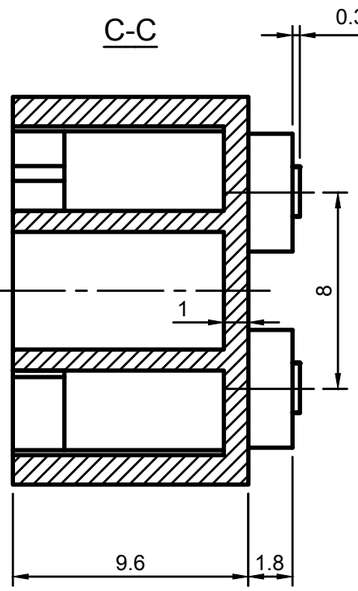

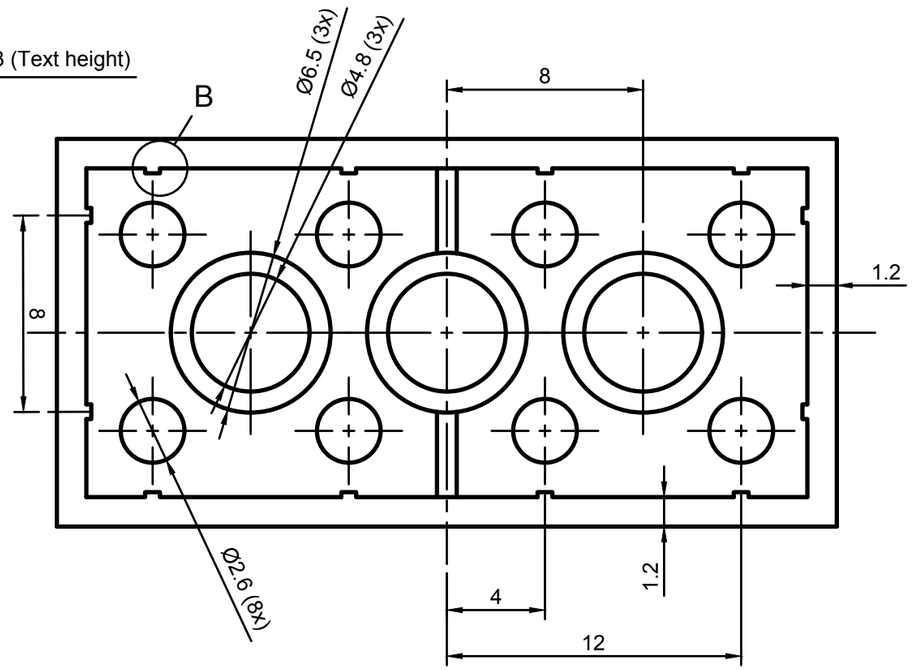

D (10:1)

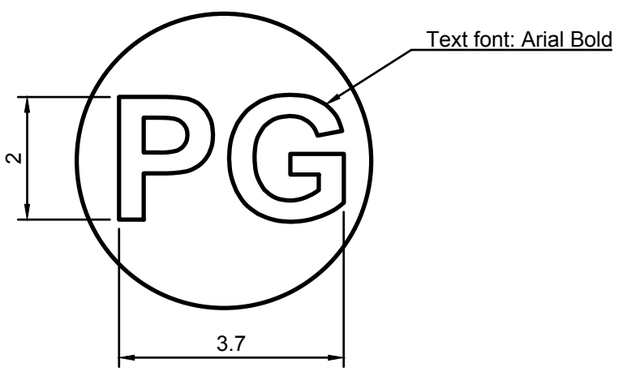

Item	Qty	Part Number	Material	Mass
1	1	B60	ABS Plastic	2.20 g

Parts List

General Tolerances		
Weld constr. ISO 5817 Class C	Castings ISO 8062 CT12	Threads ISO 965 6H/6g
Linear and angular dimensions		
Machined with cutting tools (does not include sawing)	ISO 2768-1-m	
Machined with non cutting tools (includes sawing)	ISO 2768-1-v	
Broken edges and angular dimensions	ISO 2768-1-c	

School subject: CAD1/CAD2	Scale: 4:1	Created by: Jorgen Nilsson	Approved by:
PERSTORP TEKNISKA GYMNASIUM		Document type: FUSION 360 Drawing	Approved date:
First angle projection		Title: B60 Modeling exercise	DWG No.: PG-24193
			Rev.: 0 / Date of issue: 2024-04-30 / Sheet: 1/1

This drawing is Perstorp Tekniska Gymnasium property and is protected according to existing law and may not without our approval be copied, imparted anyone or used without authorization

Revision history			
Rev.	Description	Created by	Rev. date

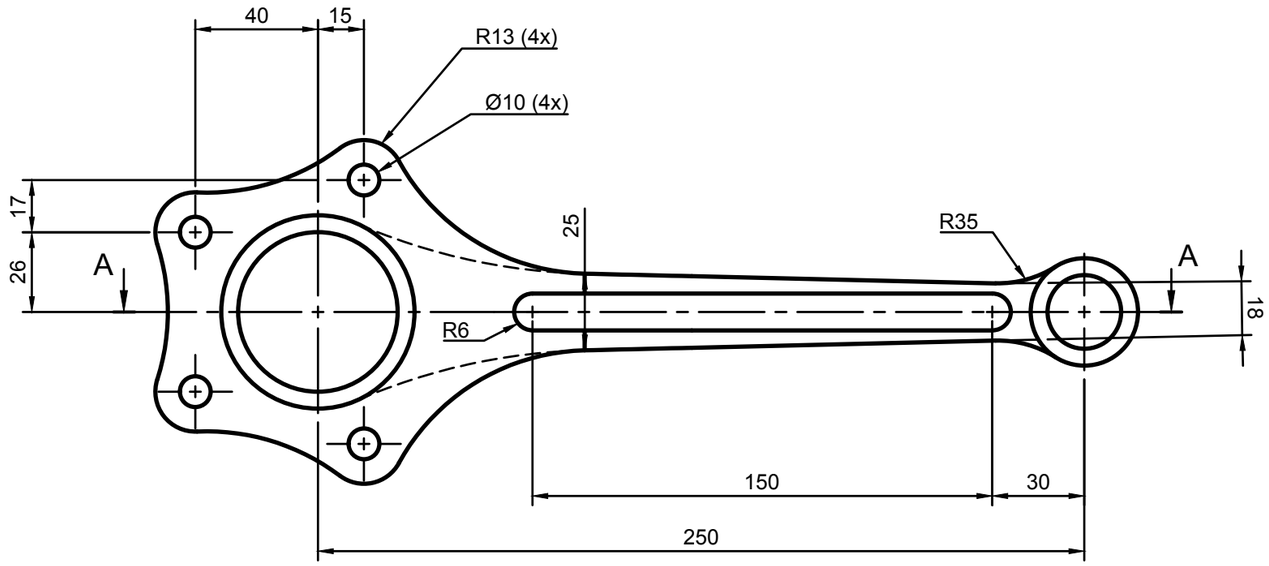

A-A

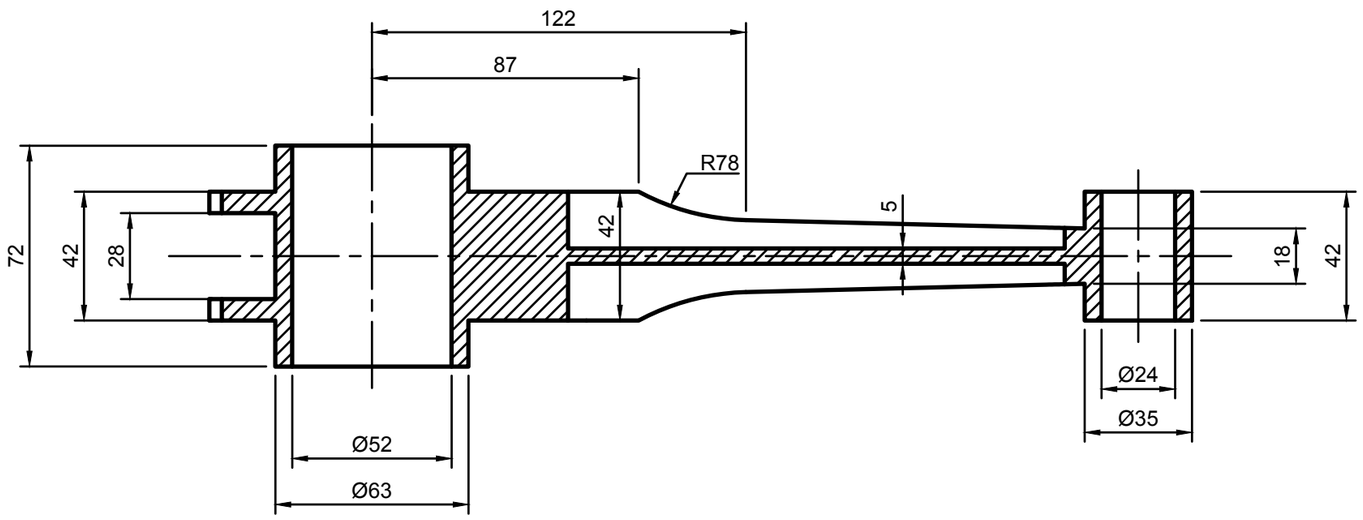

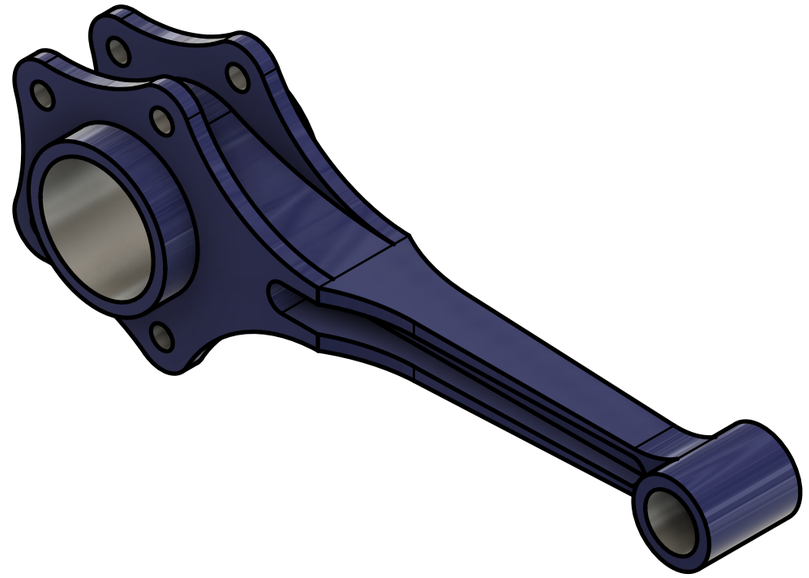

Item	Qty	Part Number	Material	Mass
1	1	B61	Stainless 1.4401	2.12 kg

Parts List

General Tolerances		
Weld constr. ISO 5817 Class C	Castings ISO 8062 CT12	Threads ISO 965 6H/6g
Linear and angular dimensions		
Machined with cutting tools (does not include sawing)	ISO 2768-1-m	
Machined with non cutting tools (includes sawing)	ISO 2768-1-v	
Broken edges and angular dimensions	ISO 2768-1-c	

School subject: CAD1/CAD2	Scale: 1:2	Created by: Jorgen Nilsson	Approved by:
PERSTORP TEKNISKA GYMNASIUM		Document type: FUSION 360 Drawing	Approved date:
First angle projection		Title: B61 Modeling exercise	DWG No.: PG-24194
			Rev.: 0 / Date of issue: 2024-04-30 / Sheet: 1/1

This drawing is Perstorp Tekniska Gymnasium property and is protected according to existing law and may not without our approval be copied, imparted anyone or used without authorization

Revision history			
Rev.	Description	Created by	Rev. date

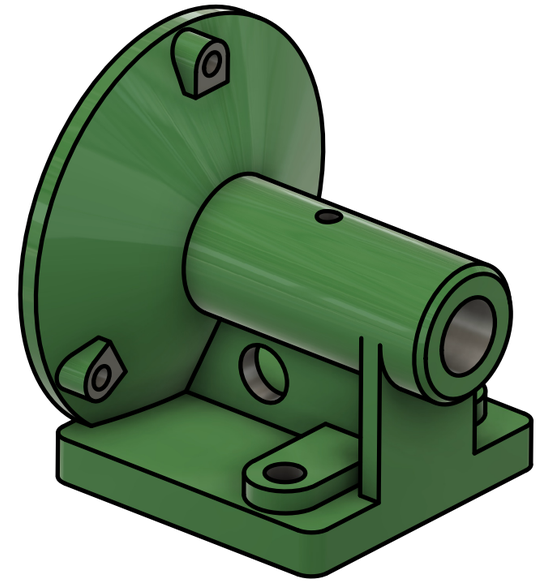

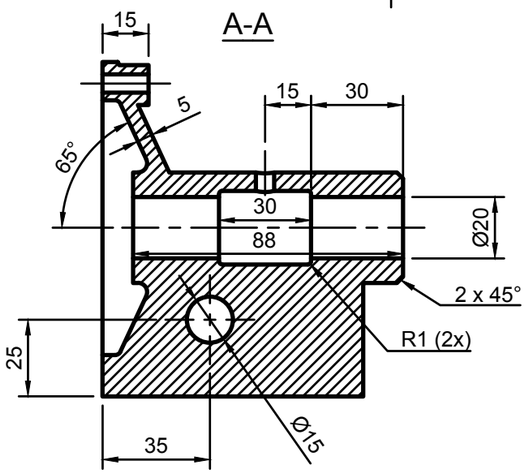

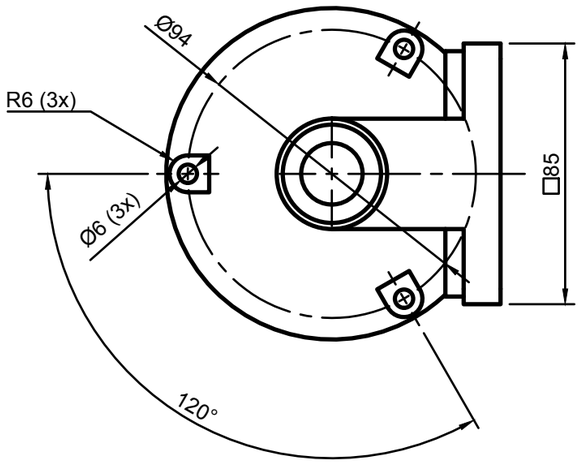

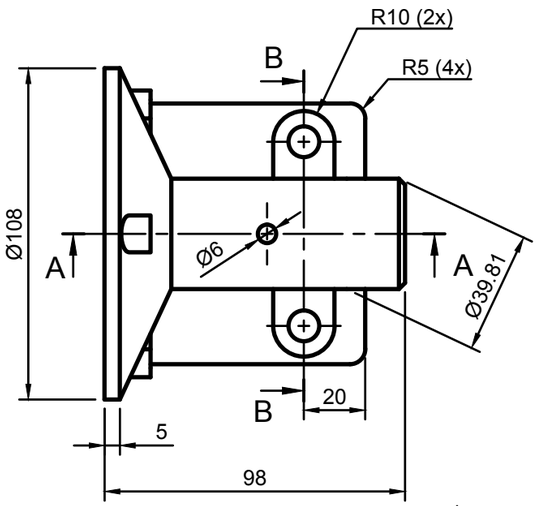

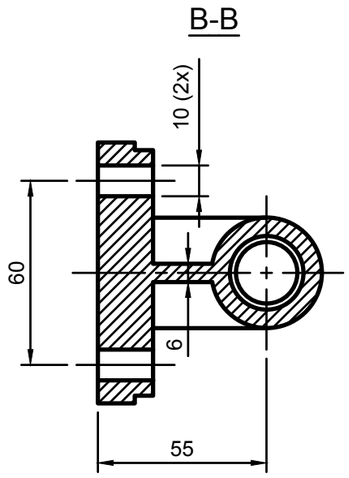

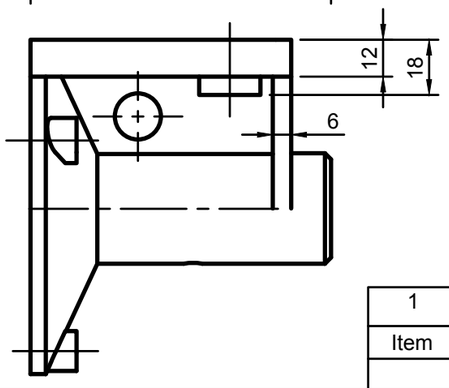

Item	Qty	Part Number	Material	Mass
1	1	B62	S355J2G3	1.70 kg

Parts List

General Tolerances		
Weld constr. ISO 5817 Class C	Castings ISO 8062 CT12	Threads ISO 965 6H/6g
Linear and angular dimensions		
Machined with cutting tools (does not include sawing)	ISO 2768-1-m	
Machined with non cutting tools (includes sawing)	ISO 2768-1-v	
Broken edges and angular dimensions	ISO 2768-1-c	

School subject: CAD1/CAD2	Scale: 1:2	Created by: Jorgen Nilsson	Approved by:
PERSTORP TEKNISKA GYMNASIUM		Document type: FUSION 360 Drawing	Approved date:
First angle projection		Title: B62 Modeling exercise	DWG No.: PG-24187
			Rev.: 0 / Date of issue: 2024-04-27 / Sheet: 1/1

This drawing is Perstorp Tekniska Gymnasium property and is protected according to existing law and may not without our approval be copied, imparted anyone or used without authorization

Revision history			
Rev.	Description	Created by	Rev. date

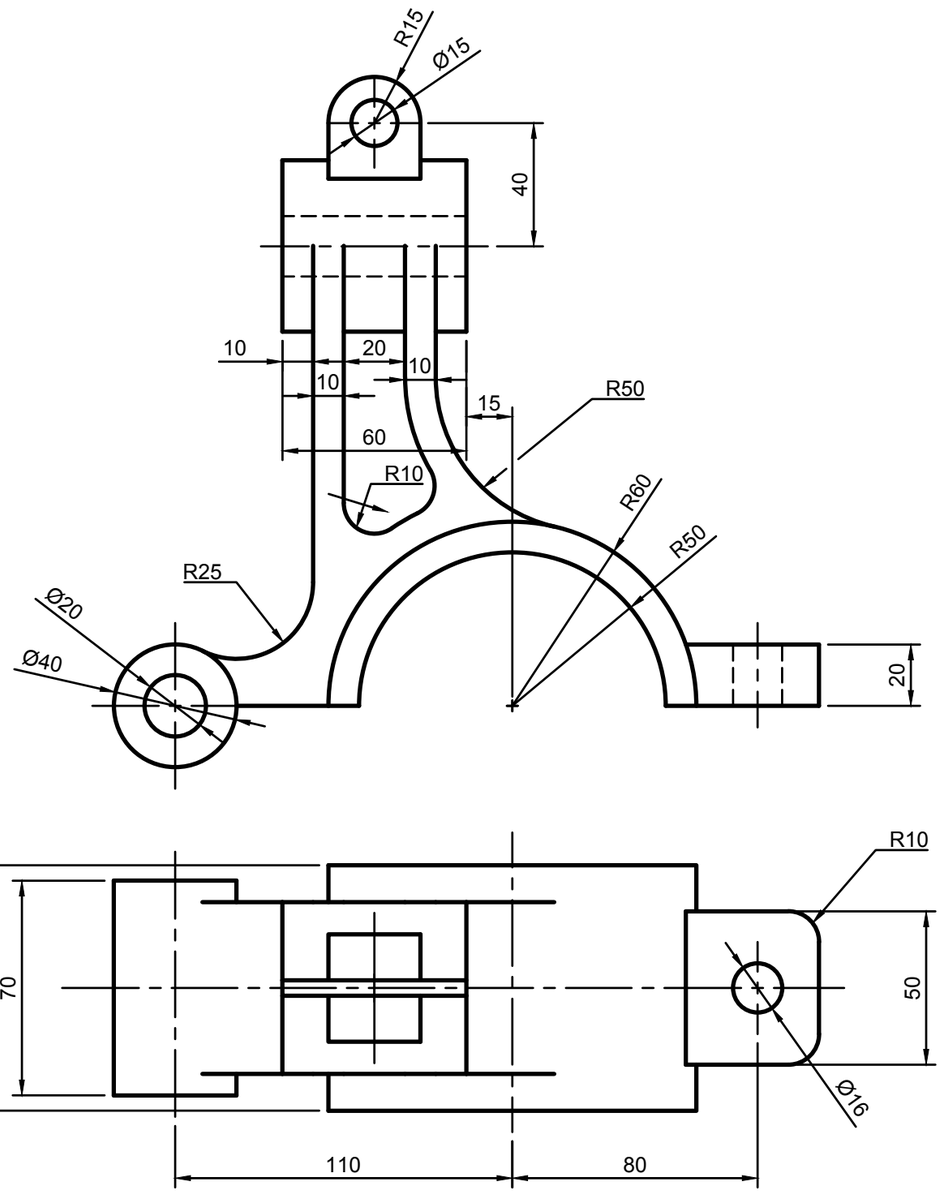

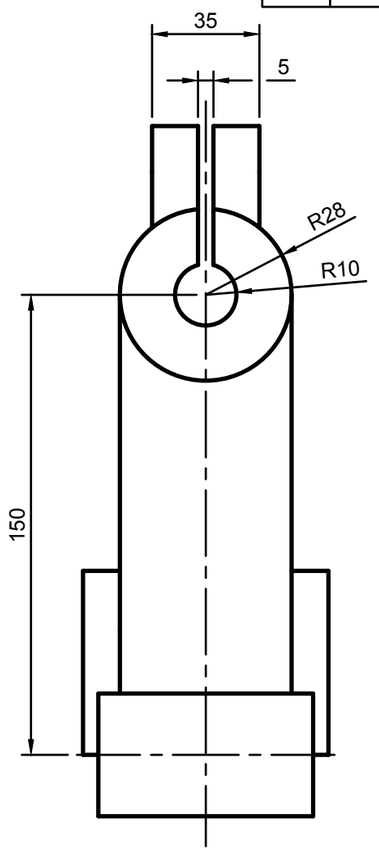

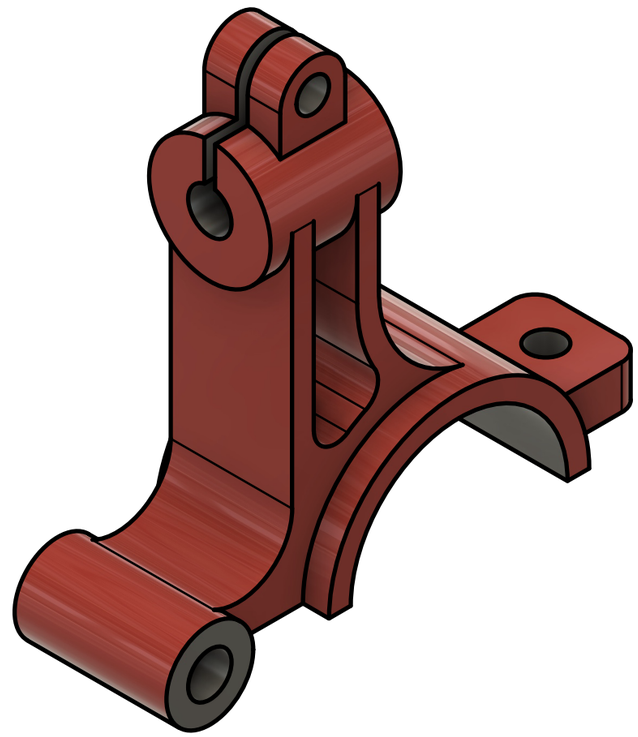

Item	Qty	Part Number	Material	Mass
1	1	B63	S355J2G3	4.39 kg

Parts List

General Tolerances		
Weld constr. ISO 5817 Class C	Castings ISO 8062 CT12	Threads ISO 965 6H/6g
Linear and angular dimensions		
Machined with cutting tools (does not include sawing)	ISO 2768-1-m	
Machined with non cutting tools (includes sawing)	ISO 2768-1-v	
Broken edges and angular dimensions	ISO 2768-1-c	

School subject: CAD1/CAD2	Scale: 1:2	Created by: Jorgen Nilsson	Approved by:
PERSTORP TEKNISKA GYMNASIUM		Document type: FUSION 360 Drawing	Approved date:
First angle projection		Title: B63 Modeling exercise	DWG No.: PG-24196
			Rev.: 0 / Date of issue: 2024-05-02 / Sheet: 1/1

This drawing is Perstorp Tekniska Gymnasium property and is protected according to existing law and may not without our approval be copied, imparted anyone or used without authorization

Revision history			
Rev.	Description	Created by	Rev. date

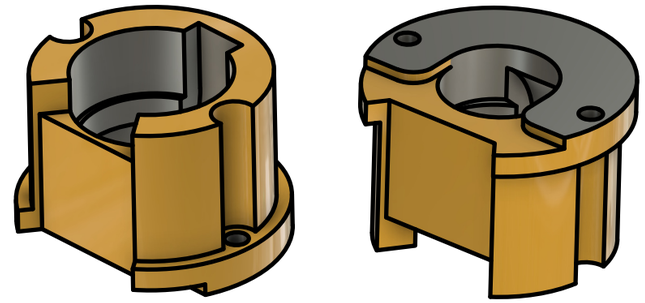

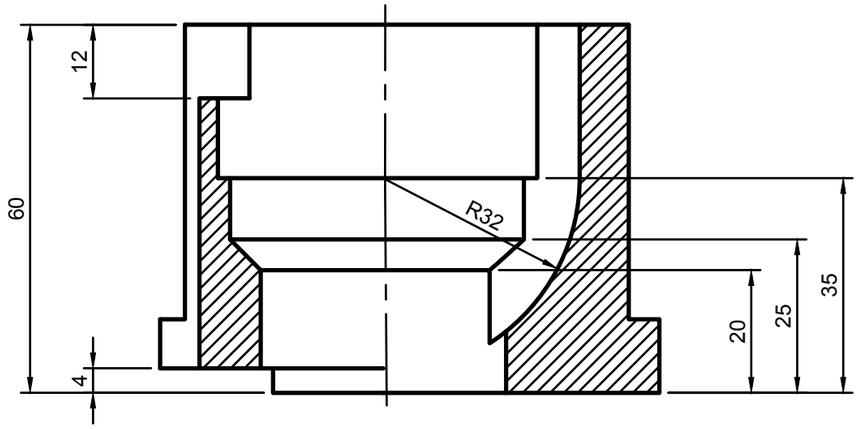

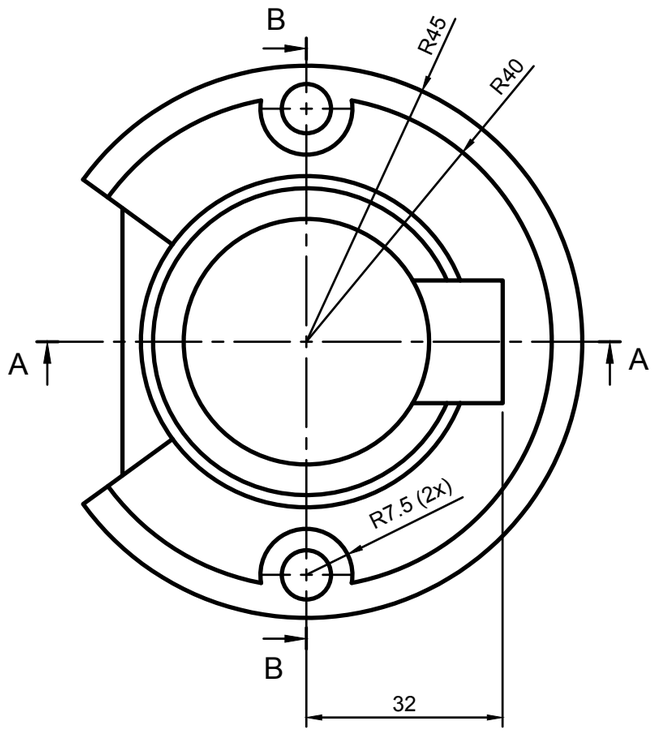

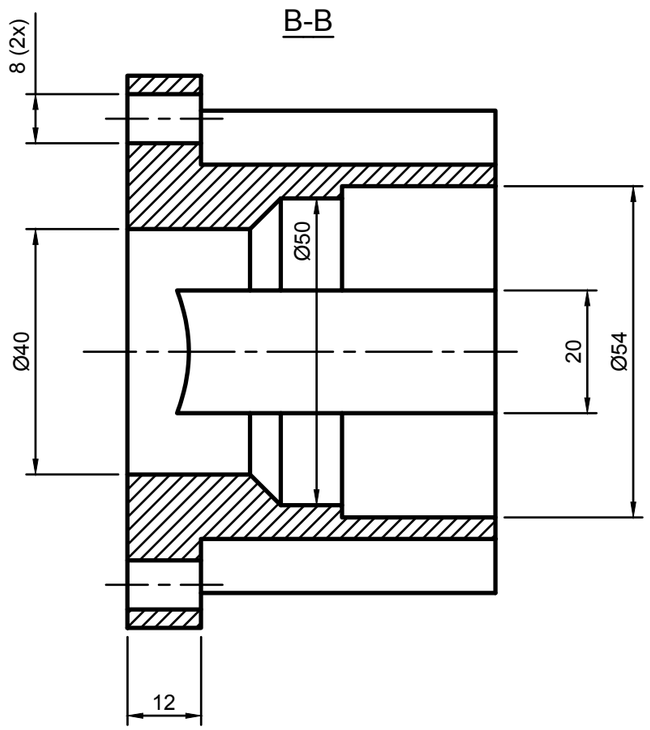

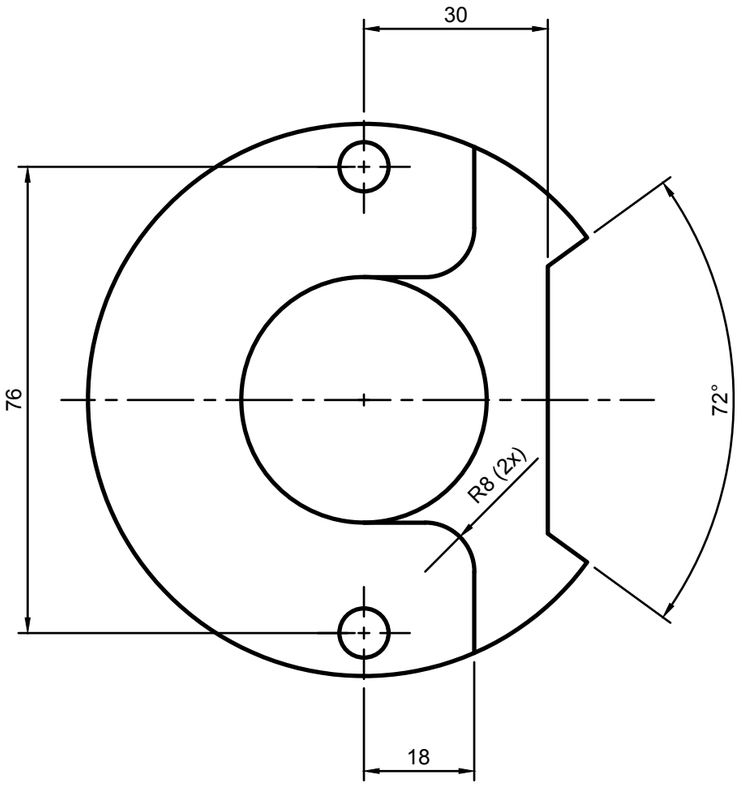

Item	Qty	Part Number	Material	Mass
1	1	B64	S355J2G3	1.24 kg

Parts List

General Tolerances		
Weld constr. ISO 5817 Class C	Castings ISO 8062 CT12	Threads ISO 965 6H/6g
Linear and angular dimensions		
Machined with cutting tools (does not include sawing)	ISO 2768-1-m	
Machined with non cutting tools (includes sawing)	ISO 2768-1-v	
Broken edges and angular dimensions	ISO 2768-1-c	

School subject: CAD1/CAD2	Scale: 1:1	Created by: Jorgen Nilsson	Approved by:
PERSTORP TEKNISKA GYMNASIUM		Document type: FUSION 360 Drawing	Approved date:
First angle projection		Title: B64 Modeling exercise	DWG No.: PG-24197
			Rev.: 0 / Date of issue: 2024-07-30 / Sheet: 1/1

This drawing is Perstorp Tekniska Gymnasium property and is protected according to existing law and may not without our approval be copied, imparted anyone or used without authorization

Revision history			
Rev.	Description	Created by	Rev. date

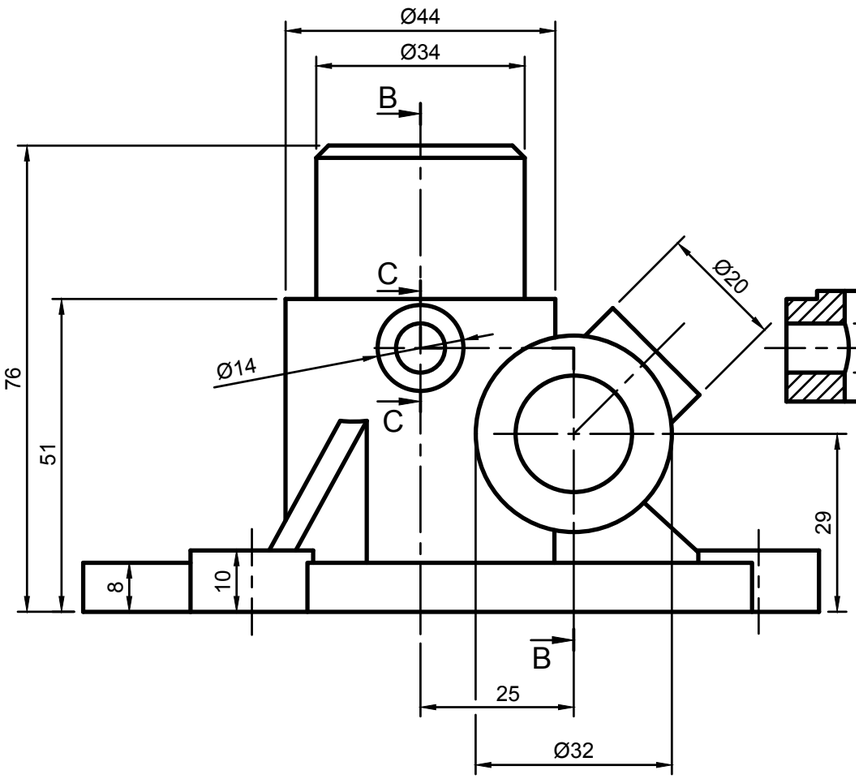

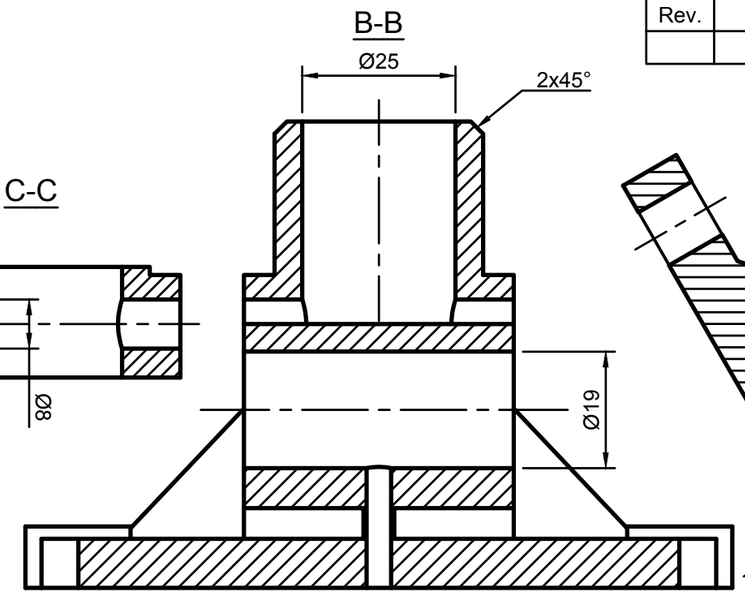

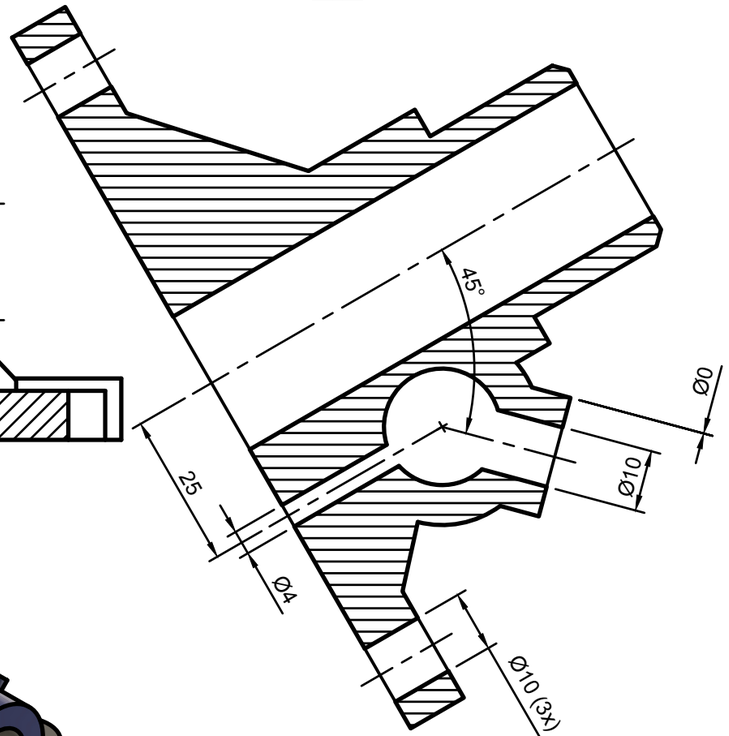

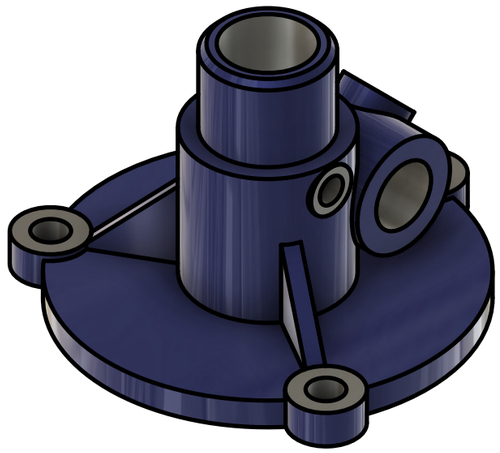

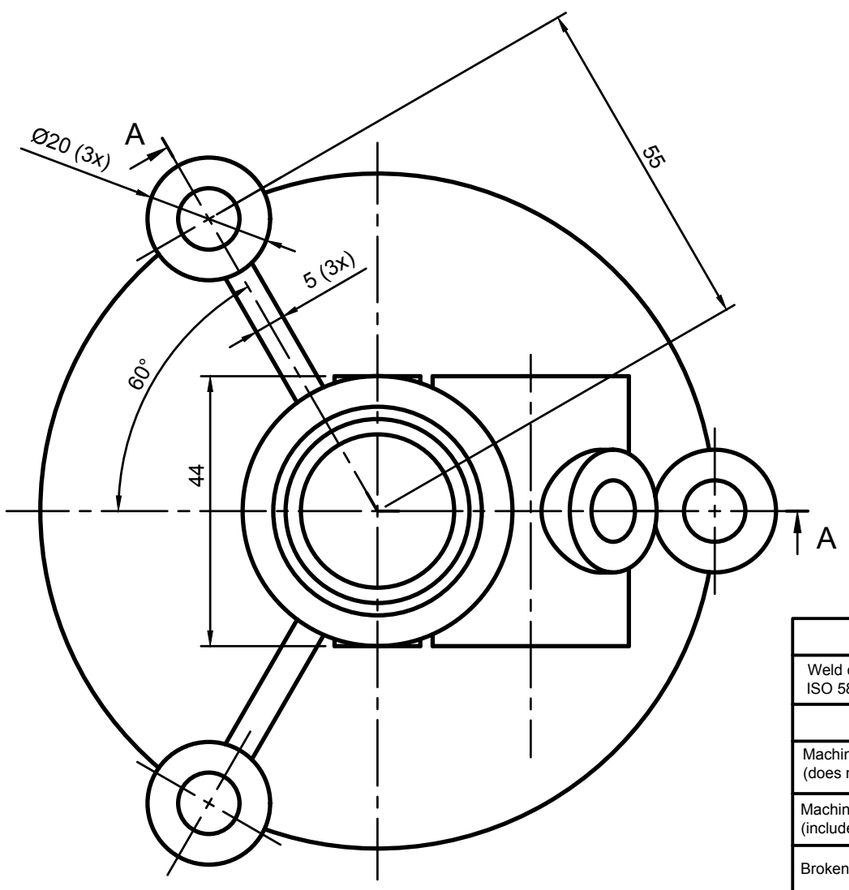

Item	Qty	Part Number	Material	Mass
1	1	B65	S355J2G3	1.16 kg

Parts List

General Tolerances		
Weld constr. ISO 5817 Class C	Castings ISO 8062 CT12	Threads ISO 965 6H/6g
Linear and angular dimensions		
Machined with cutting tools (does not include sawing)	ISO 2768-1-m	
Machined with non cutting tools (includes sawing)	ISO 2768-1-v	
Broken edges and angular dimensions	ISO 2768-1-c	

School subject: CAD1/CAD2	Scale: 1:1	Created by: Jorgen Nilsson	Approved by:
PERSTORP TEKNISKA GYMNASIUM		Document type: FUSION 360 Drawing	Approved date:
First angle projection		Title: B65 Modeling exercise	DWG No.: PG-24198
			Rev.: 0 / Date of issue: 2024-05-03 / Sheet: 1/1

This drawing is Perstorp Tekniska Gymnasium property and is protected according to existing law and may not without our approval be copied, imparted anyone or used without authorization

Revision history			
Rev.	Description	Created by	Rev. date

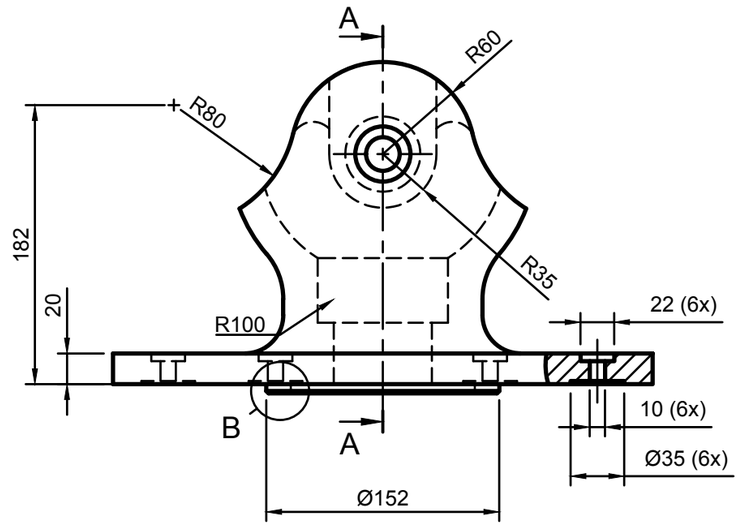

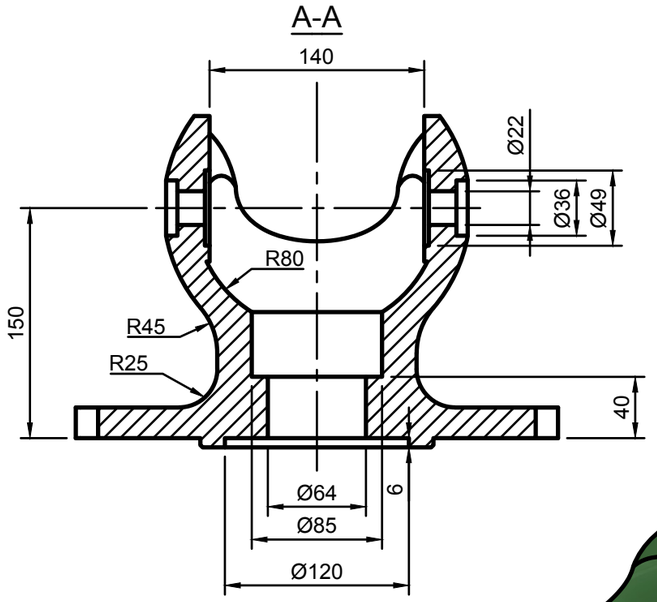

B (1:2)

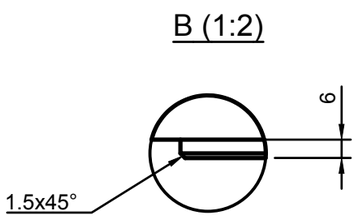

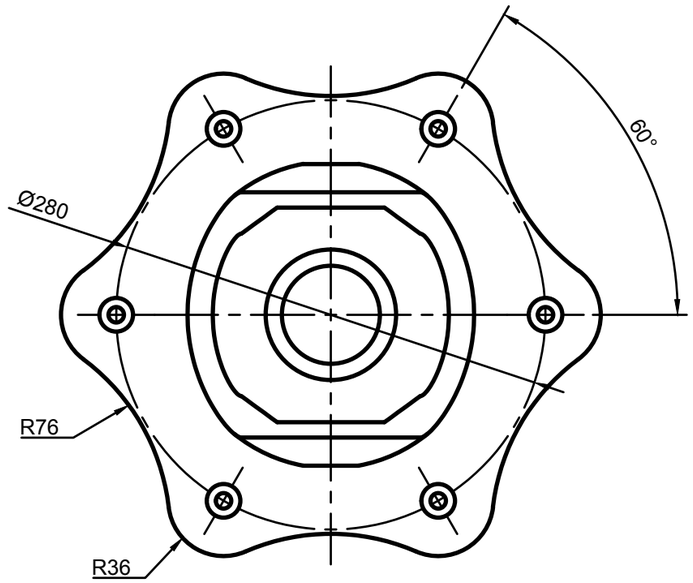

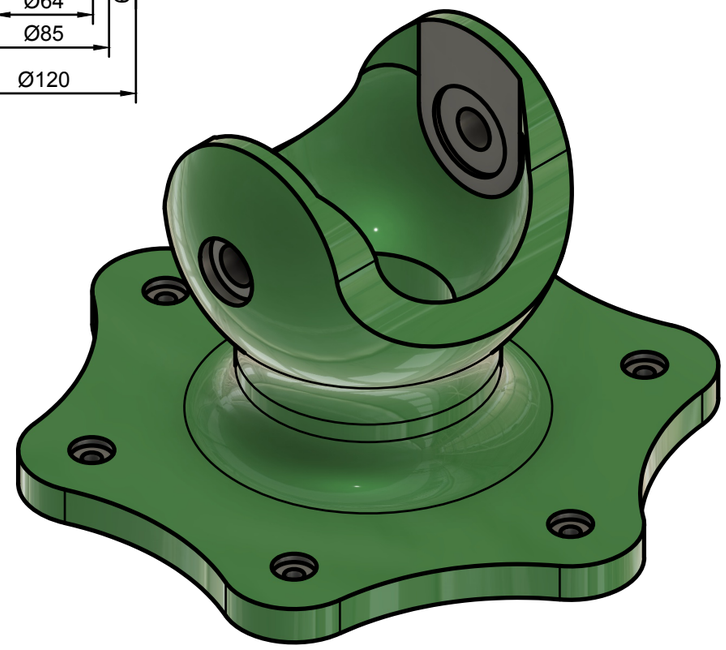

Item	Qty	Part Number	Material	Mass
1	1	B66	Plastic PETG	3.86 kg

Parts List

General Tolerances		
Weld constr. ISO 5817 Class C	Castings ISO 8062 CT12	Threads ISO 965 6H/6g
Linear and angular dimensions		
Machined with cutting tools (does not include sawing)		ISO 2768-1-m
Machined with non cutting tools (includes sawing)		ISO 2768-1-v
Broken edges and angular dimensions		ISO 2768-1-c

School subject: CAD1/CAD2	Scale: 1:4	Created by: Jorgen Nilsson	Approved by:
PERSTORP TEKNISKA GYMNASIUM		Document type: FUSION 360 Drawing	Approved date:
First angle projection		Title: B66 Modeling exercise	DWG No.: PG-24199
			Rev.: 0 / Date of issue: 2024-05-03 / Sheet: 1/1