This drawing is Perstorp Tekniska Gymnasium property and is protected according to existing law and may not without our approval be copied, imparted anyone or used without authorization

Revision history			
Rev.	Description	Created by	Rev. date

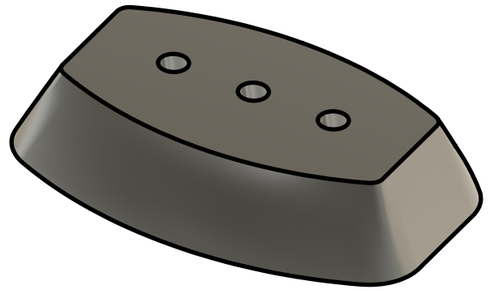

B (2:1)

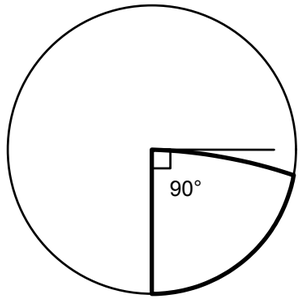

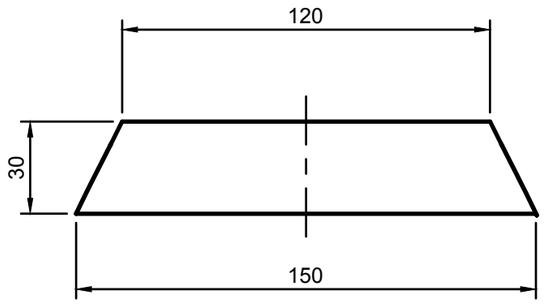

A-A

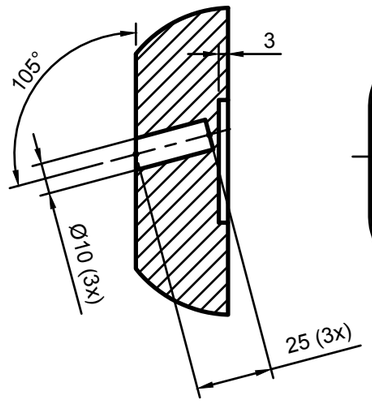

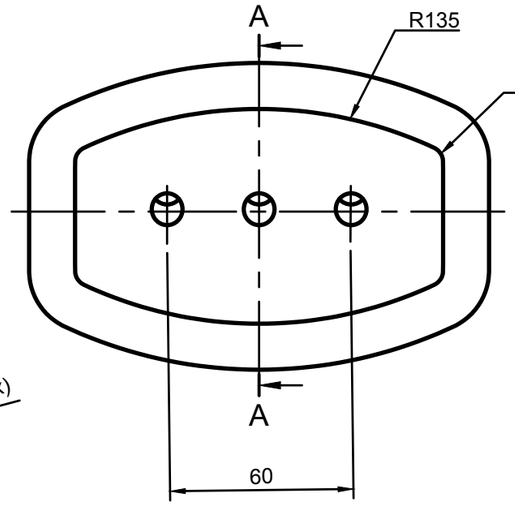

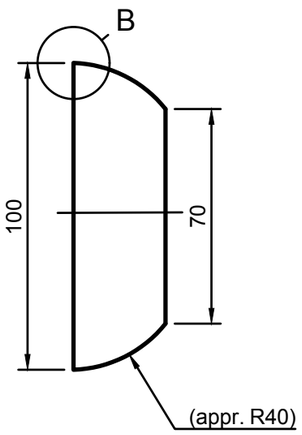

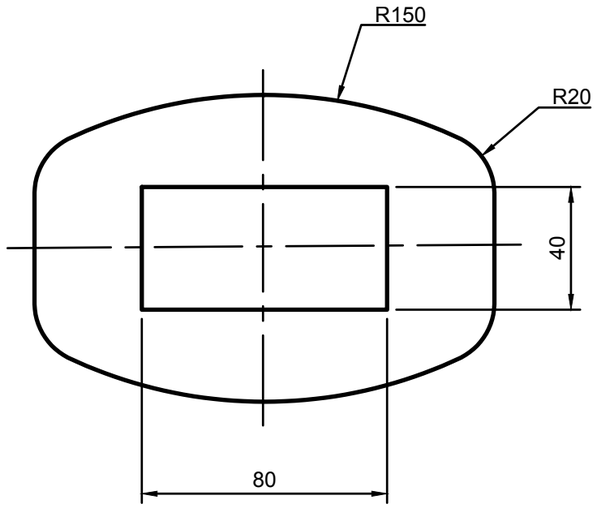

General Tolerances		
Weld constr. ISO 5817 Class C	Castings ISO 8062 CT12	Threads ISO 965 6H/6g
Linear and angular dimensions		
Machined with cutting tools (does not include sawing)		ISO 2768-1-m
Machined with non cutting tools (includes sawing)		ISO 2768-1-v
Broken edges and angular dimensions		ISO 2768-1-c

School subject: CAD1/CAD2	Scale: 1:2	Created by: Jörgen Nilsson	Approved by:
PERSTORP TEKNISKA GYMNASIUM		Document type: FUSION 360 Drawing	Approved date:
First angle projection		Title: E1 - Pen holder Surface modeling exercise	DWG No.: PG-26101
			Rev.: 0 / Date of issue: 2026-05-04 / Sheet: 1/1

This drawing is Perstorp Tekniska Gymnasium property and is protected according to existing law and may not without our approval be copied, imparted anyone or used without authorization

Revision history			
Rev.	Description	Created by	Rev. date

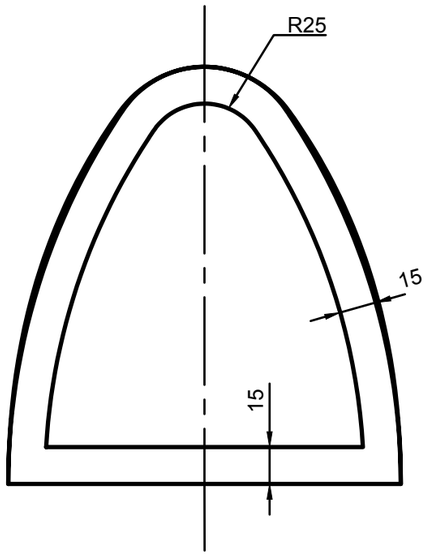

A (1:2)

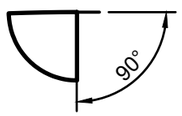

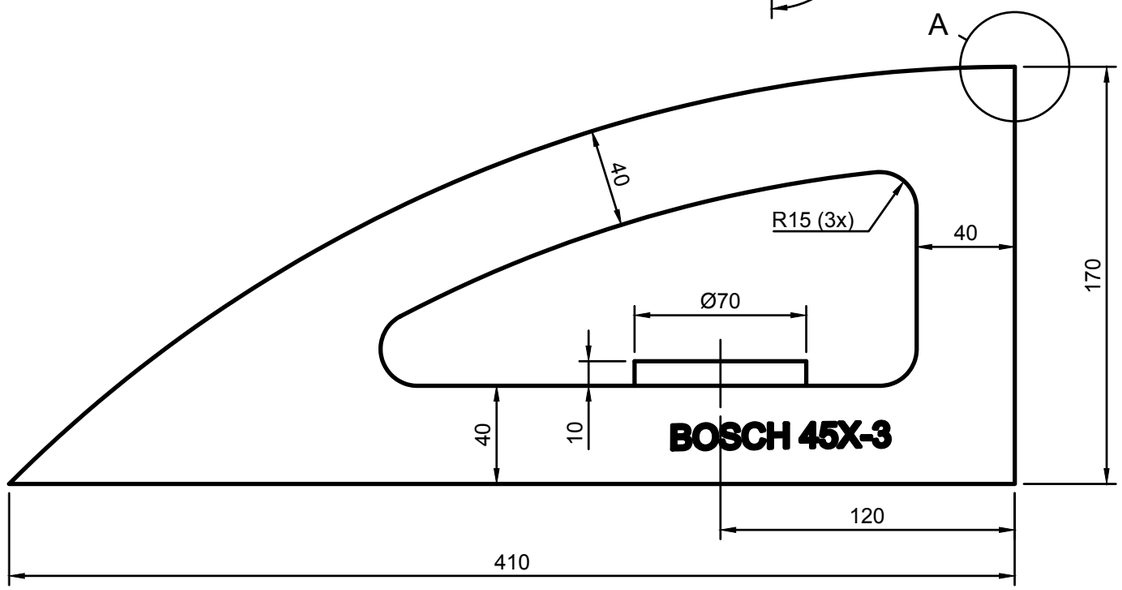

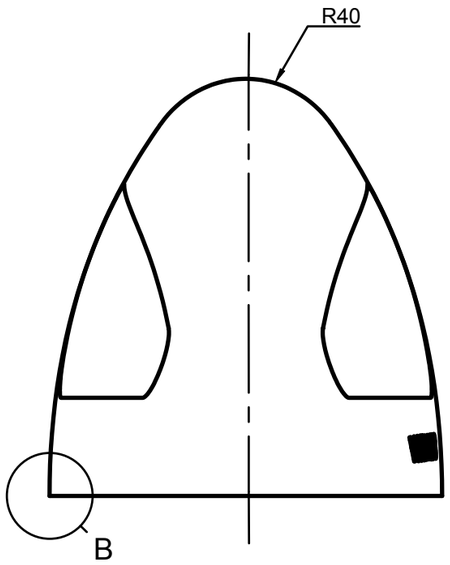

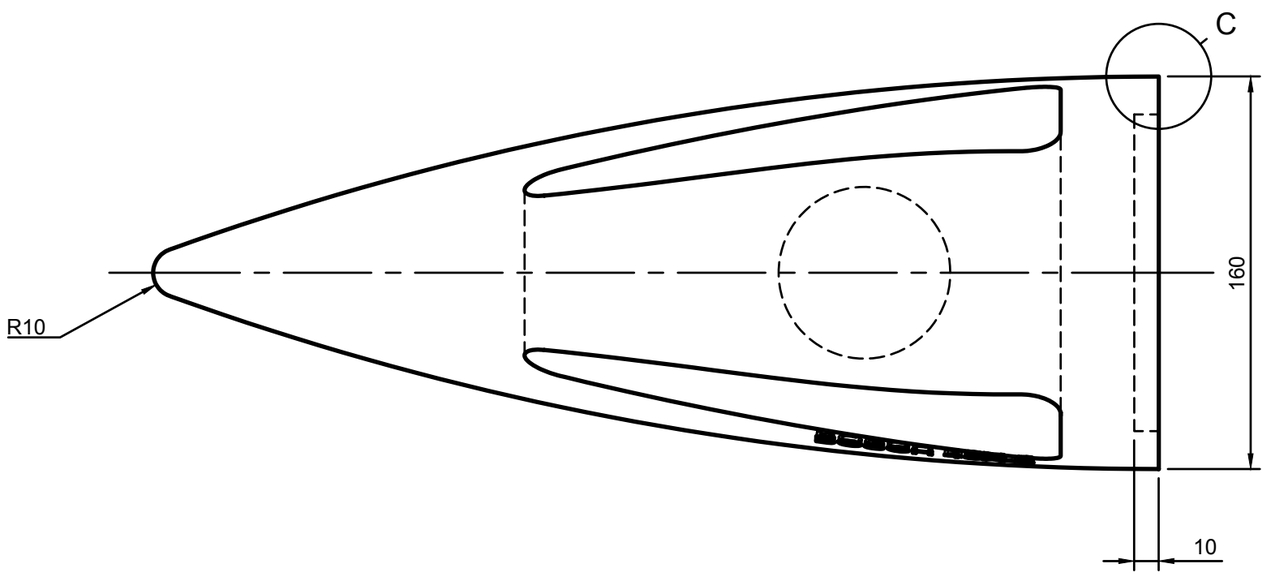

C (1:2)

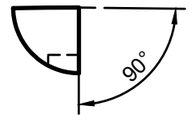

B (1:2)

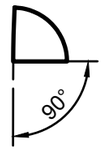

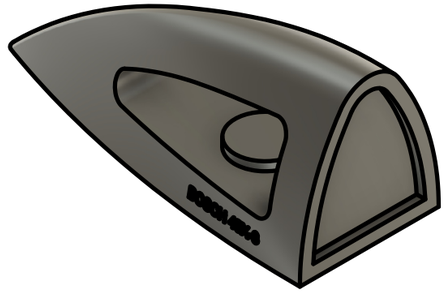

General Tolerances		
Weld constr. ISO 5817 Class C	Castings ISO 8062 CT12	Threads ISO 965 6H/6g
Linear and angular dimensions		
Machined with cutting tools (does not include sawing)	ISO 2768-1-m	
Machined with non cutting tools (includes sawing)	ISO 2768-1-v	
Broken edges and angular dimensions	ISO 2768-1-c	

School subject: CAD1/CAD2	Scale: 1:2.5	Created by: Jorgen Nilsson	Approved by:
PERSTORP TEKNISKA GYMNASIUM		Document type: FUSION 360 Drawing	Approved date:
First angle projection		Title: E2 - Iron Surface mmodeling exercise	DWG No.: PG-25107
			Rev.: 0 / Date of issue: 2025-04-10 / Sheet: 1/1

This drawing is Perstorp Tekniska Gymnasium property and is protected according to existing law and may not without our approval be copied, imparted anyone or used without authorization

Revision history			
Rev.	Description	Created by	Rev. date

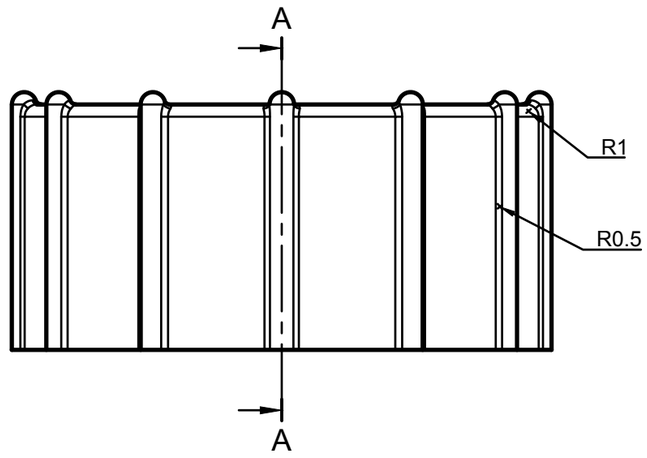

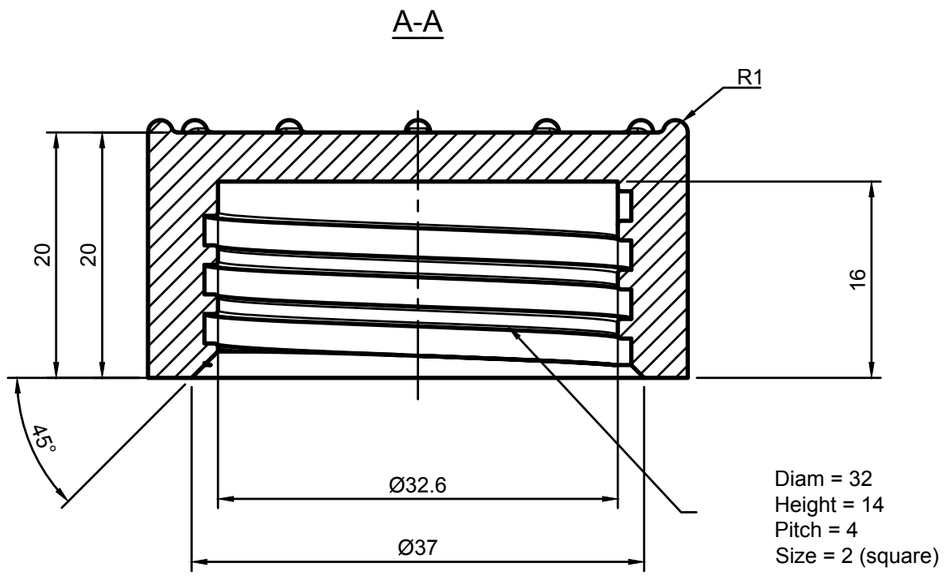

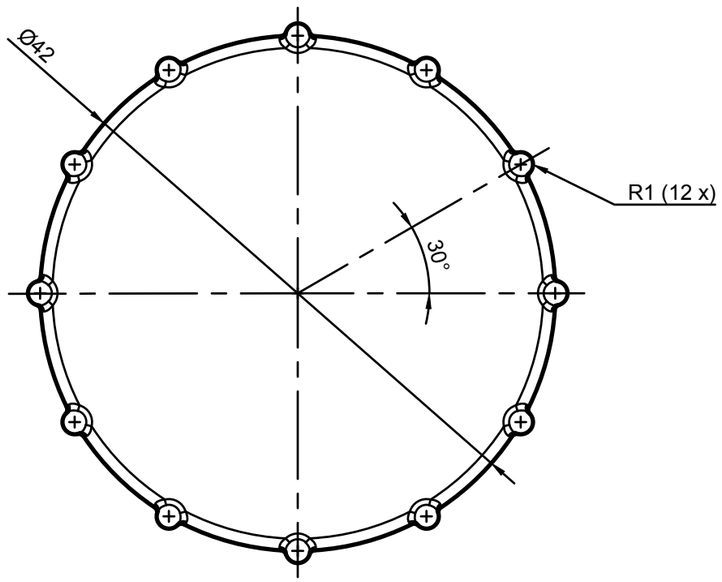

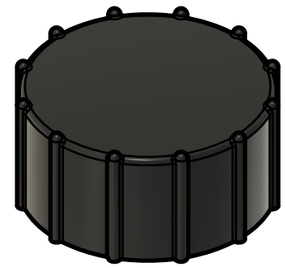

Scale 1:1

General Tolerances		
Weld constr. ISO 5817 Class C	Castings ISO 8062 CT12	Threads ISO 965 6H/6g
Linear and angular dimensions		
Machined with cutting tools (does not include sawing)	ISO 2768-1-m	
Machined with non cutting tools (includes sawing)	ISO 2768-1-v	
Broken edges and angular dimensions	ISO 2768-1-c	

School subject: CAD1/CAD2	Scale: 2:1	Created by: Jorgen Nilsson	Approved by:
PERSTORP TEKNISKA GYMNASIUM		Document type: FUSION 360 Drawing	Approved date:
First angle projection		Title: E3 - Flaskkork	DWG No.: PG-23117
			Rev.: 0 / Date of issue: 2023-12-06 / Sheet: 1/1

This drawing is Perstorp Tekniska Gymnasium property and is protected according to existing law and may not without our approval be copied, imparted anyone or used without authorization

Revision history			
Rev.	Description	Created by	Rev. date

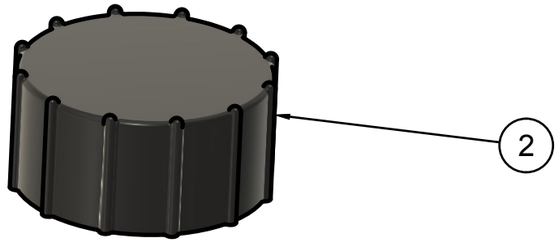

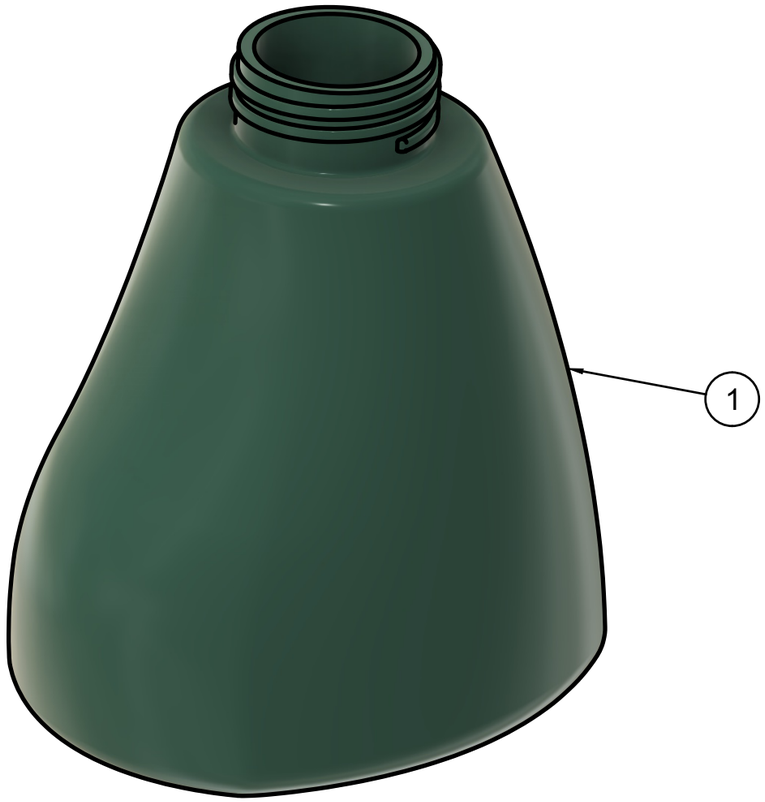

Item	Qty	Part Number	Material
2	1	Flaskkork	Nylon 12 (with Formlabs Fuse 1 3D Printer)
1	1	Plastflaska	----

Parts List

General Tolerances		
Weld constr. ISO 5817 Class C	Castings ISO 8062 CT12	Threads ISO 965 6H/6g
Linear and angular dimensions		
Machined with cutting tools (does not include sawing)	ISO 2768-1-m	
Machined with non cutting tools (includes sawing)	ISO 2768-1-v	
Broken edges and angular dimensions	ISO 2768-1-c	

School subject: CAD1/CAD2	Scale: 1:1	Created by: Jorgen Nilsson	Approved by:
PERSTORP TEKNISKA GYMNASIUM		Document type: FUSION 360 Drawing	Approved date:
First angle projection		Title: E3 - Plastflaska Assembly	DWG No.: PG-24200
			Rev.: 0 / Date of issue: 2024-05-06 / Sheet: 1/1

This drawing is Perstorp Tekniska Gymnasium property and is protected according to existing law and may not without our approval be copied, imparted anyone or used without authorization

Revision history			
Rev.	Description	Created by	Rev. date

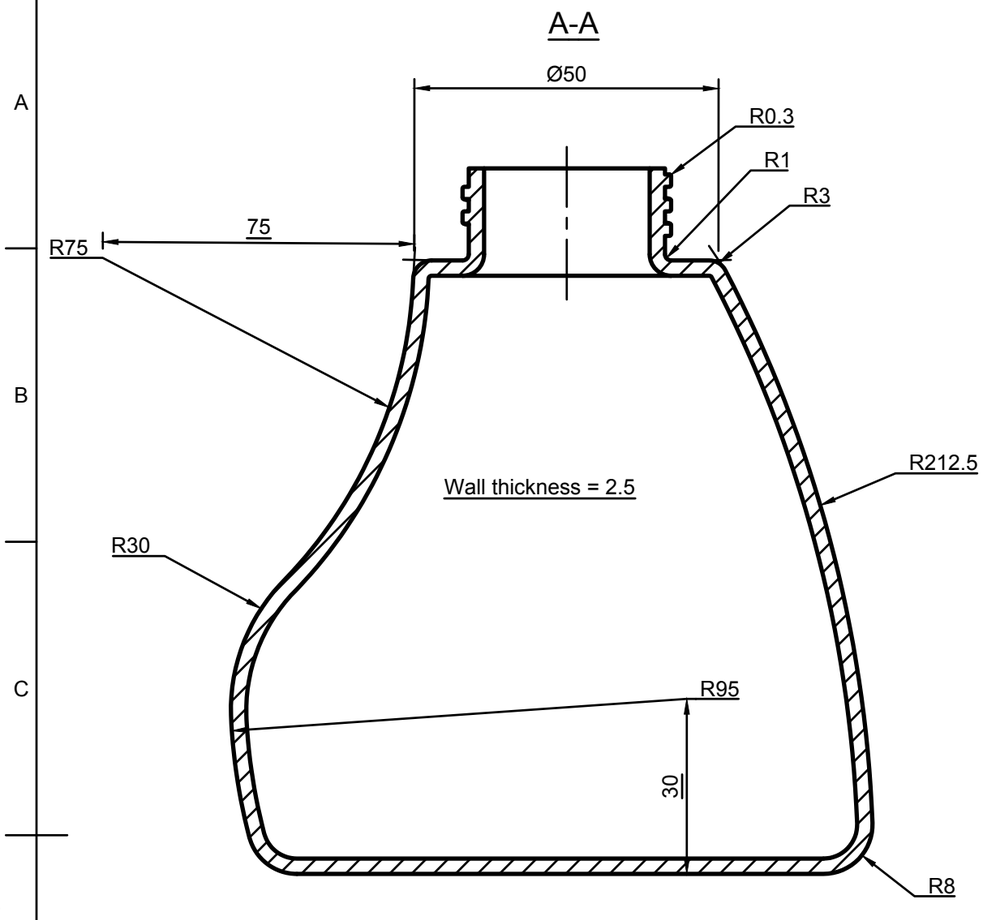

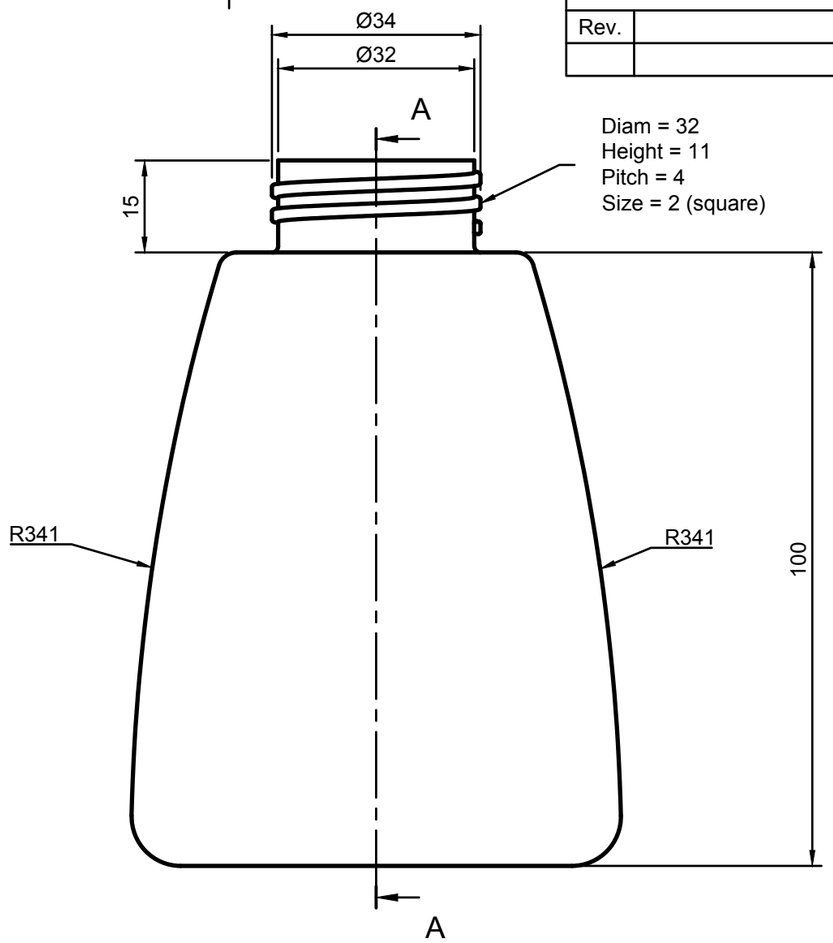

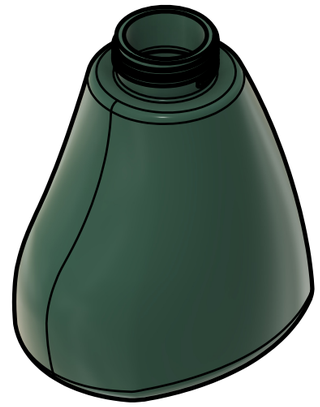

Scale 1:2

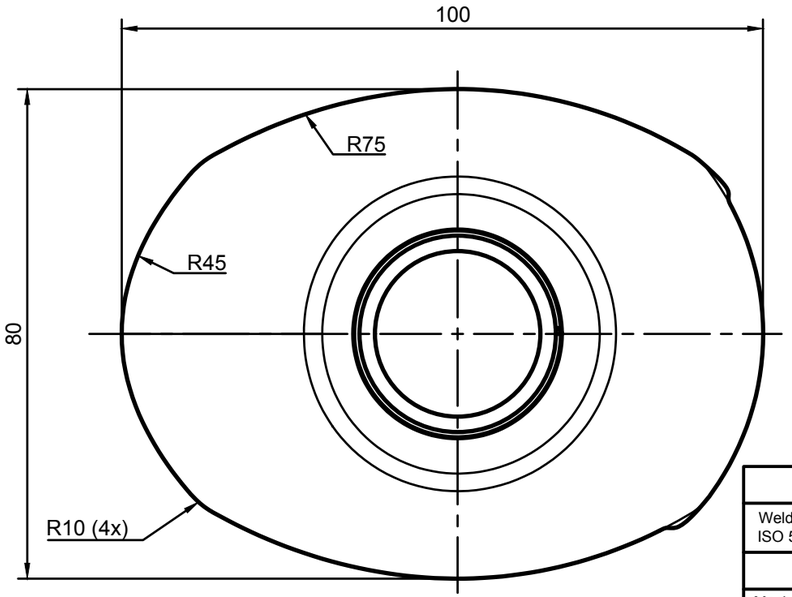

1	1	Plastflaska	Thermoplastic Resin
Item	Qty	Part Number	Material

Parts List

General Tolerances		
Weld constr. ISO 5817 Class C	Castings ISO 8062 CT12	Threads ISO 965 6H/6g
Linear and angular dimensions		
Machined with cutting tools (does not include sawing)	ISO 2768-1-m	
Machined with non cutting tools (includes sawing)	ISO 2768-1-v	
Broken edges and angular dimensions	ISO 2768-1-c	

School subject: CAD1/CAD2	Scale: 1:1	Created by: Jorgen Nilsson	Approved by:
PERSTORP TEKNISKA GYMNASIUM		Document type: FUSION 360 Drawing	Approved date:
First angle projection		Title: E3 - Plastflaska Surface modeling exercise	DWG No.: PG-23116
			Rev.: 0 / Date of issue: 2023-12-05 / Sheet: 1/1

This drawing is Perstorp Tekniska Gymnasium property and is protected according to existing law and may not without our approval be copied, imparted anyone or used without authorization

Revision history			
Rev.	Description	Created by	Rev. date

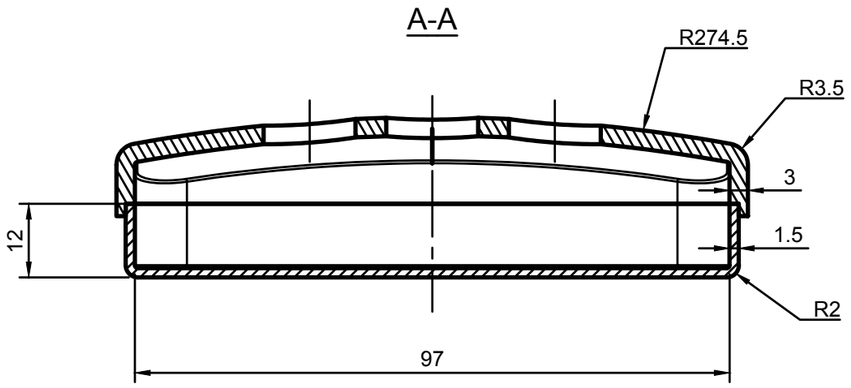

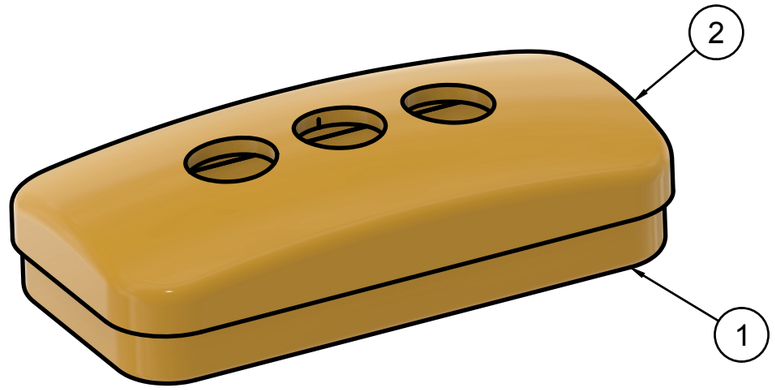

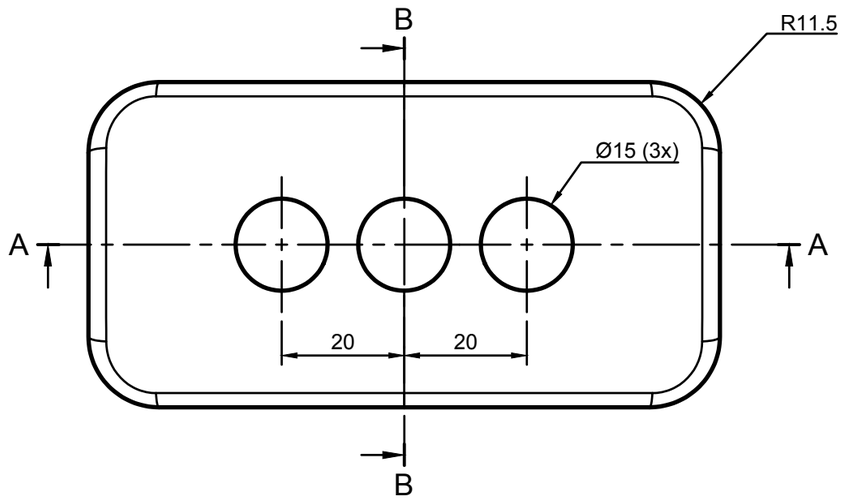

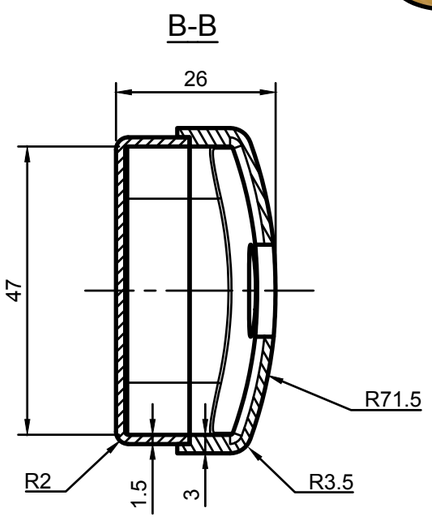

Item	Qty	Part Number	Material
2	1	Top part	ABS Plastic
1	1	Bottom part	ABS Plastic

Parts List

General Tolerances		
Weld constr. ISO 5817 Class C	Castings ISO 8062 CT12	Threads ISO 965 6H/6g
Linear and angular dimensions		
Machined with cutting tools (does not include sawing)	ISO 2768-1-m	
Machined with non cutting tools (includes sawing)	ISO 2768-1-v	
Broken edges and angular dimensions	ISO 2768-1-c	

School subject: CAD1/CAD2

Scale: 1:1

PERSTORP TEKNISKA GYMNASIUM

First angle projection

Created by: Jorgen Nilsson

Document type: FUSION 360 Drawing

Title: E4 - Tvålkopp

Surface modeling exercise

Approved by:

Approved date:

DWG No.: PG-24203

Rev.	Date of issue	Sheet
0	2024-09-07	1/1

This drawing is Perstorp Tekniska Gymnasium property and is protected according to existing law and may not without our approval be copied, imparted anyone or used without authorization

Revision history			
Rev.	Description	Created by	Rev. date

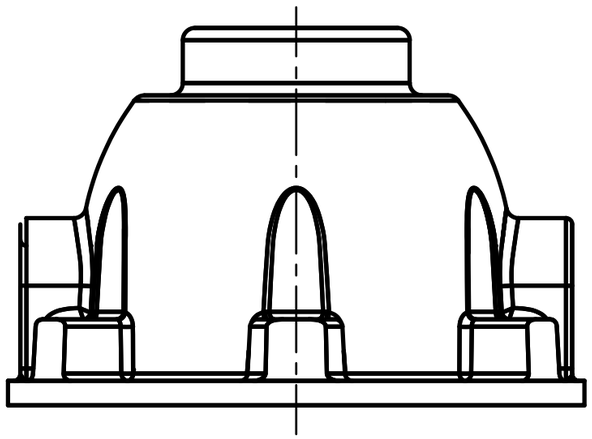

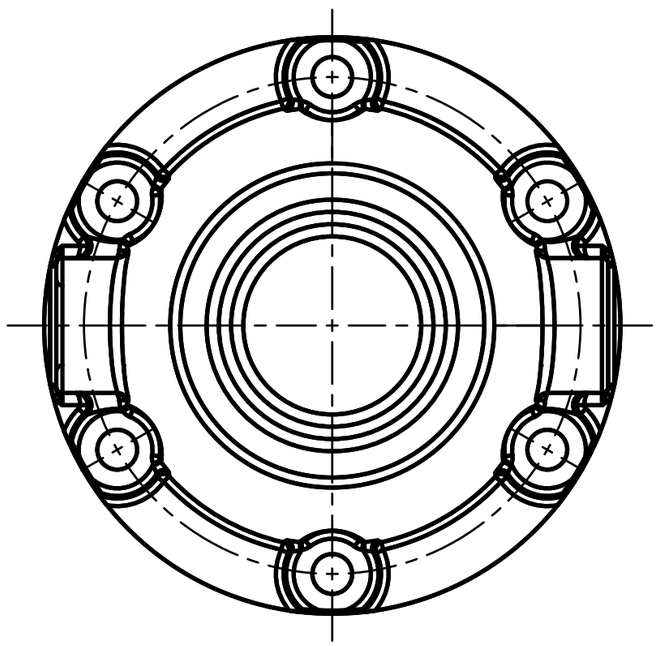

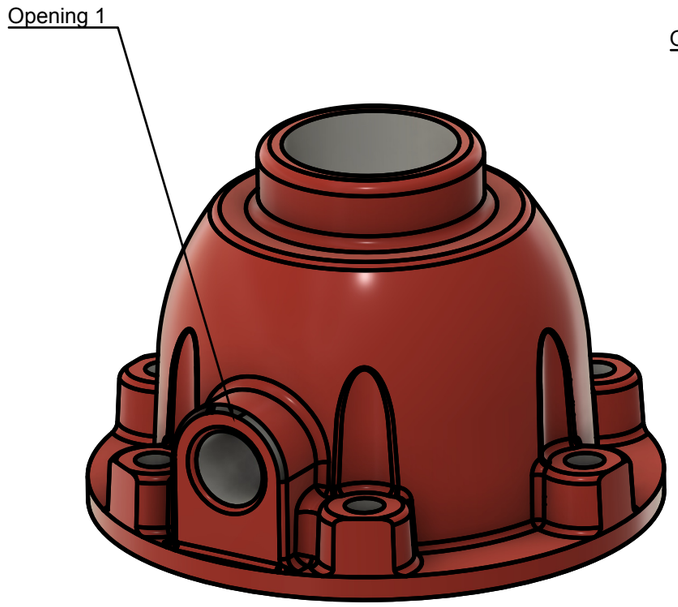

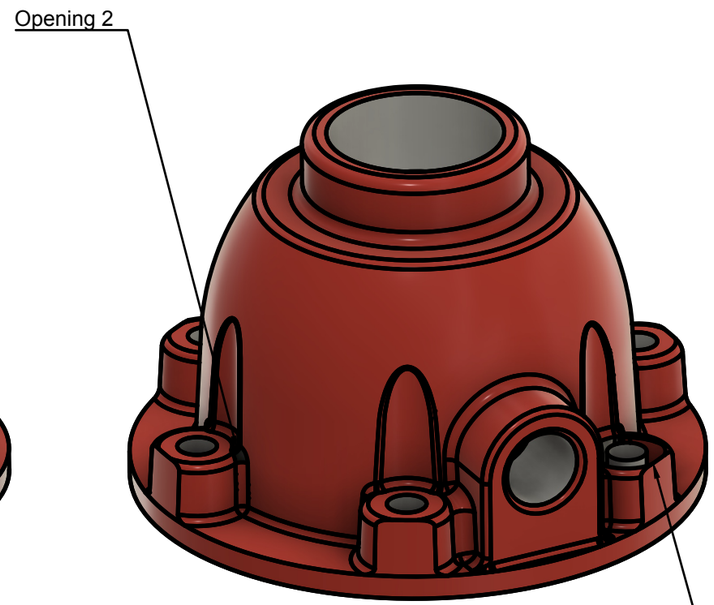



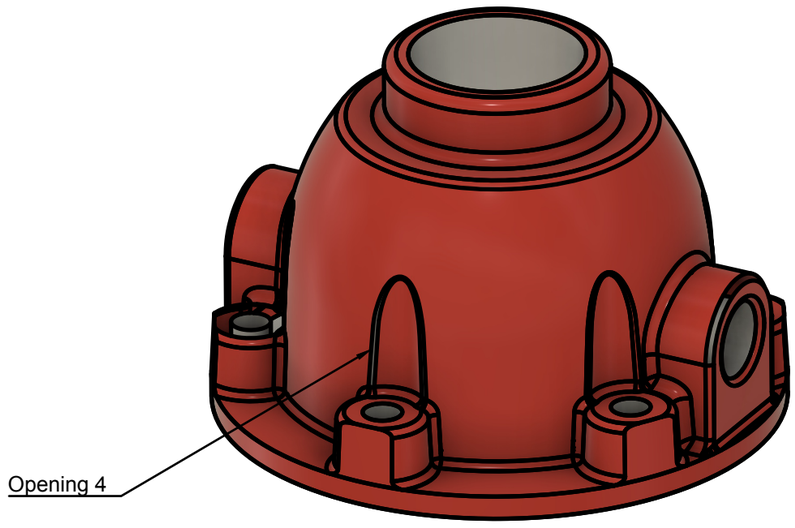

General Tolerances		
Weld constr. ISO 5817 Class C	Castings ISO 8062 CT12	Threads ISO 965 6H/6g
Linear and angular dimensions		
Machined with cutting tools (does not include sawing)	ISO 2768-1-m	
Machined with non cutting tools (includes sawing)	ISO 2768-1-v	
Broken edges and angular dimensions	ISO 2768-1-c	

School subject: CAD1/CAD2	Scale: 1:1	Created by: Jorgen Nilsson	Approved by:
PERSTORP TEKNISKA GYMNASIUM		Document type: FUSION 360 Drawing	Approved date:
First angle projection		Title: E5 - Differential Housing Surface repair exercise	DWG No.: PG-24210
			Rev.: 0 / Date of issue: 2024-08-14 / Sheet: 1/1

This drawing is Perstorp Tekniska Gymnasium property and is protected according to existing law and may not without our approval be copied, imparted anyone or used without authorization

Revision history			
Rev.	Description	Created by	Rev. date

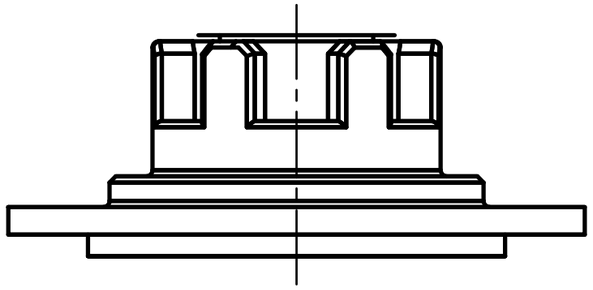

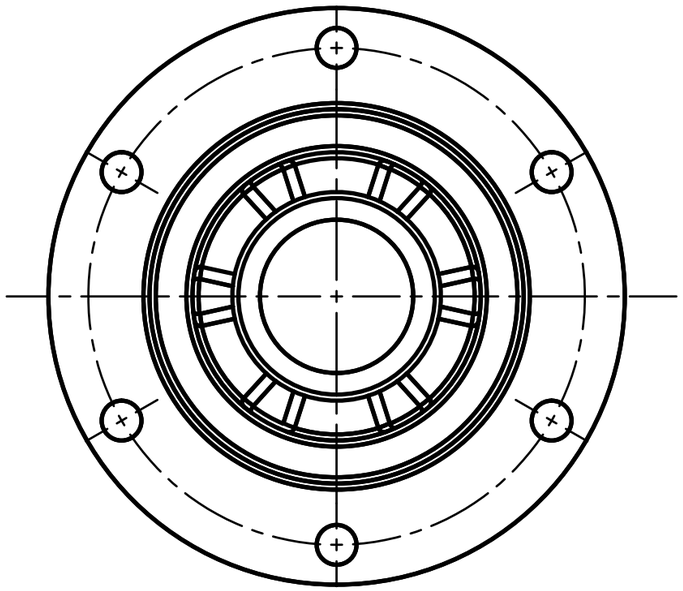

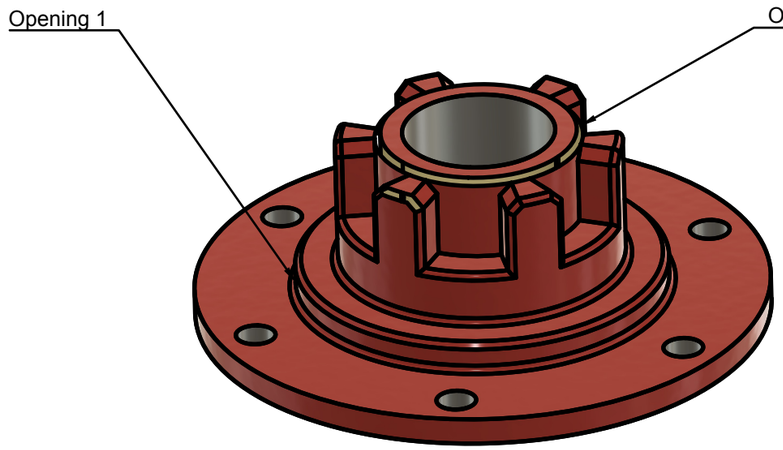

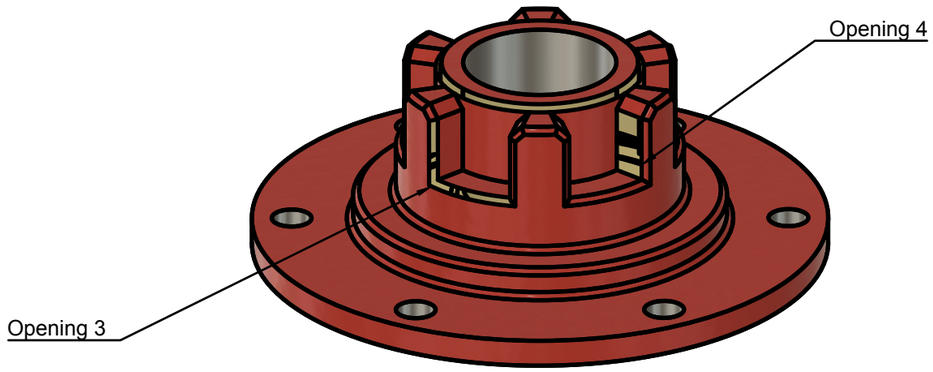

General Tolerances		
Weld constr. ISO 5817 Class C	Castings ISO 8062 CT12	Threads ISO 965 6H/6g
Linear and angular dimensions		
Machined with cutting tools (does not include sawing)		ISO 2768-1-m
Machined with non cutting tools (includes sawing)		ISO 2768-1-v
Broken edges and angular dimensions		ISO 2768-1-c

School subject: CAD1/CAD2	Scale: 1:1	Created by: Jorgen Nilsson	Approved by:
PERSTORP TEKNISKA GYMNASIUM		Document type: FUSION 360 Drawing	Approved date:
First angle projection		Title: E6 - Differential Housing 2 Surface repair exercise	DWG No.: PG-24212
			Rev.: 0 / Date of issue: 2024-09-01 / Sheet: 1/1

This drawing is Perstorp Tekniska Gymnasium property and is protected according to existing law and may not without our approval be copied, imparted anyone or used without authorization

Revision history			
Rev.	Description	Created by	Rev. date

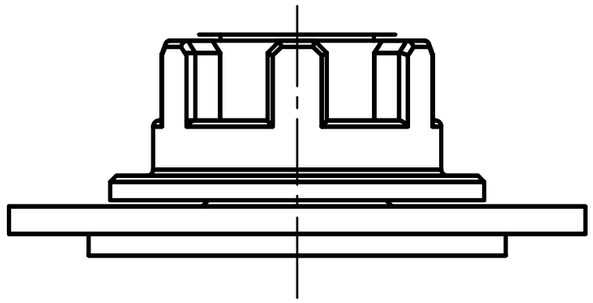

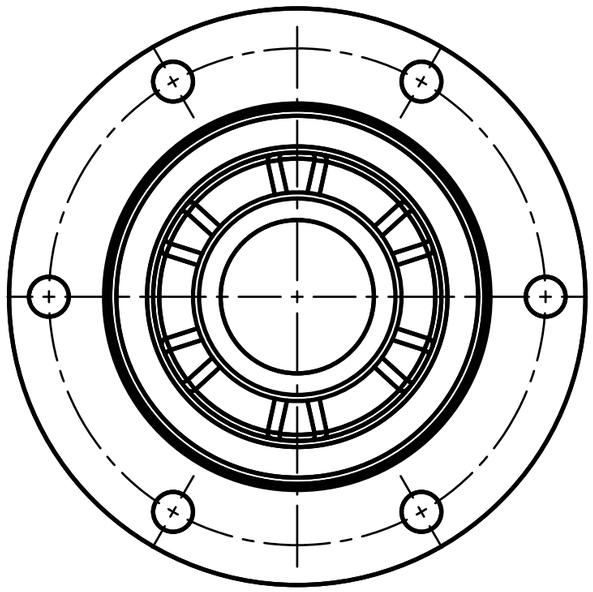

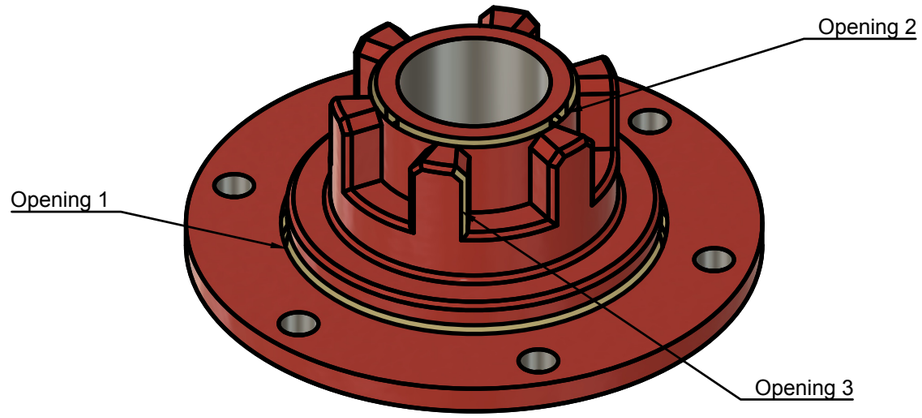

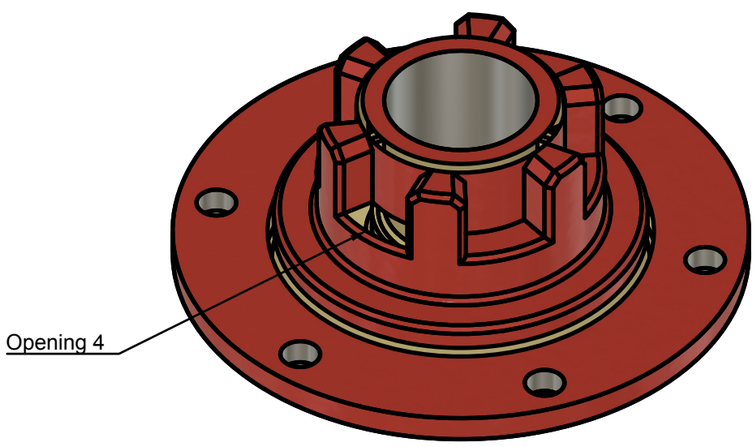

General Tolerances		
Weld constr. ISO 5817 Class C	Castings ISO 8062 CT12	Threads ISO 965 6H/6g
Linear and angular dimensions		
Machined with cutting tools (does not include sawing)	ISO 2768-1-m	
Machined with non cutting tools (includes sawing)	ISO 2768-1-v	
Broken edges and angular dimensions	ISO 2768-1-c	

School subject: CAD1/CAD2	Scale: 1:1	Created by: Jorgen Nilsson	Approved by:
PERSTORP TEKNISKA GYMNASIUM		Document type: FUSION 360 Drawing	Approved date:
First angle projection		Title: E7 - Torsion plate Surface repair exercise	DWG No.: PG-24216
			Rev.: 0 / Date of issue: 2024-09-17 / Sheet: 1/1