This drawing is Perstorp Tekniska Gymnasium property and is protected according to existing law and may not without our approval be copied, imparted anyone or used without authorization

Revision history			
Rev.	Description	Created by	Rev. date

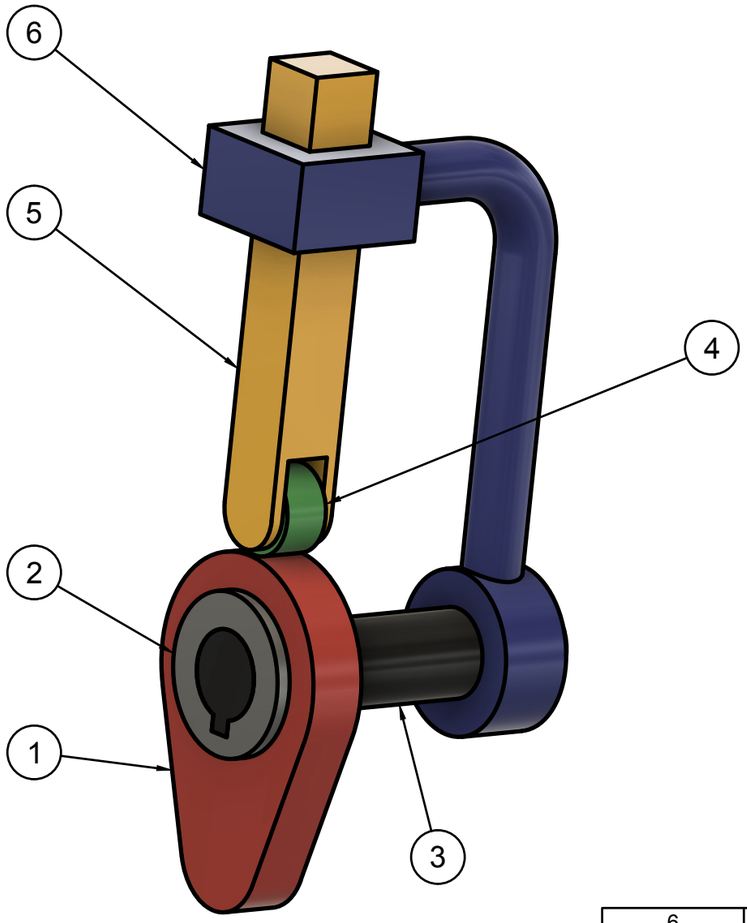

Item	Qty	Part Number	Material
6	1	Component_6	Steel
5	1	Component_5	Steel
4	1	Component_4	Steel
3	1	Component_3	Steel
2	1	Component_2	Steel
1	1	Component1	Steel

Parts List

General Tolerances		
Weld constr. ISO 5817 Class C	Castings ISO 8062 CT12	Threads ISO 965 6H/6g
Linear and angular dimensions		
Machined with cutting tools (does not include sawing)		ISO 2768-1-m
Machined with non cutting tools (includes sawing)		ISO 2768-1-v
Broken edges and angular dimensions		ISO 2768-1-c

School subject: CAD1/CAD2	Scale: 1:2	Created by: Jorgen Nilsson	Approved by:
PERSTORP TEKNISKA GYMNASIUM		Document type: FUSION 360 Drawing	Approved date:
First angle projection		Title: D1 - Cam mechanism Assembly exercise	DWG No.: PG-24139
			Rev.: 0 / Date of issue: 2024-03-06 / Sheet: 1/2

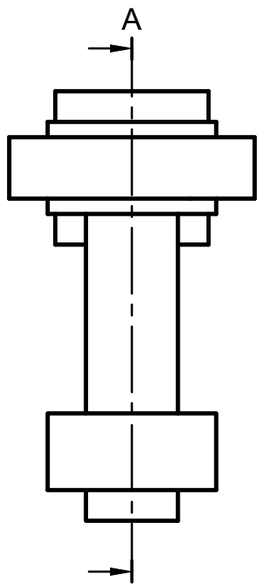

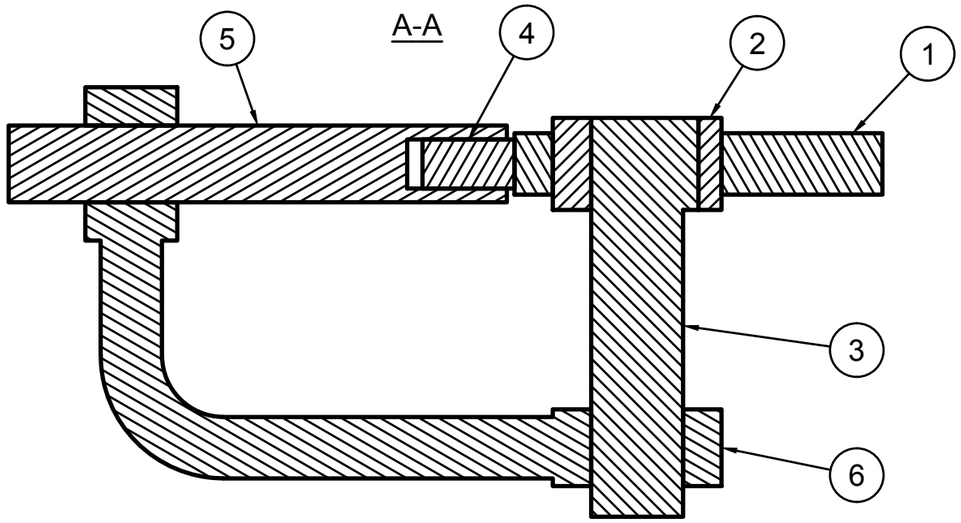

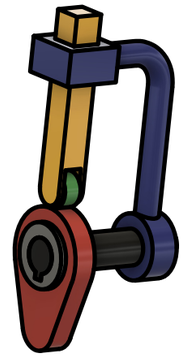

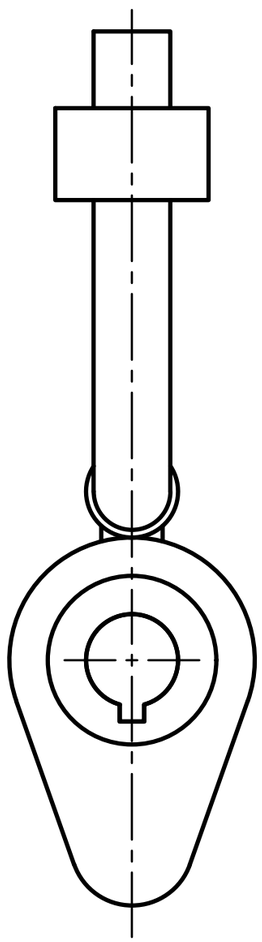

Item	Qty	Part Number	Material
6	1	Component_6	Steel
5	1	Component_5	Steel
4	1	Component_4	Steel
3	1	Component_3	Steel
2	1	Component_2	Steel
1	1	Component1	Steel

Parts List

General Tolerances		
Weld constr. ISO 5817 Class C	Castings ISO 8062 CT12	Threads ISO 965 6H/6g
Linear and angular dimensions		
Machined with cutting tools (does not include sawing)		ISO 2768-1-m
Machined with non cutting tools (includes sawing)		ISO 2768-1-v
Broken edges and angular dimensions		ISO 2768-1-c

School subject: CAD1/CAD2

Scale: 1:1

PERSTORP TEKNISKA GYMNASIUM

First angle projection

Created by: Jorgen Nilsson

Document type: FUSION 360 Drawing

Title: D1 - Cam mechanism

Assembly exercise

Approved by:

Approved date:

DWG No.: PG-24139

Rev.	Date of issue	Sheet
0	2024-03-06	2/2

This drawing is Perstorp Tekniska Gymnasium property and is protected according to existing law and may not without our approval be copied, imparted anyone or used without authorization

Revision history			
Rev.	Description	Created by	Rev. date

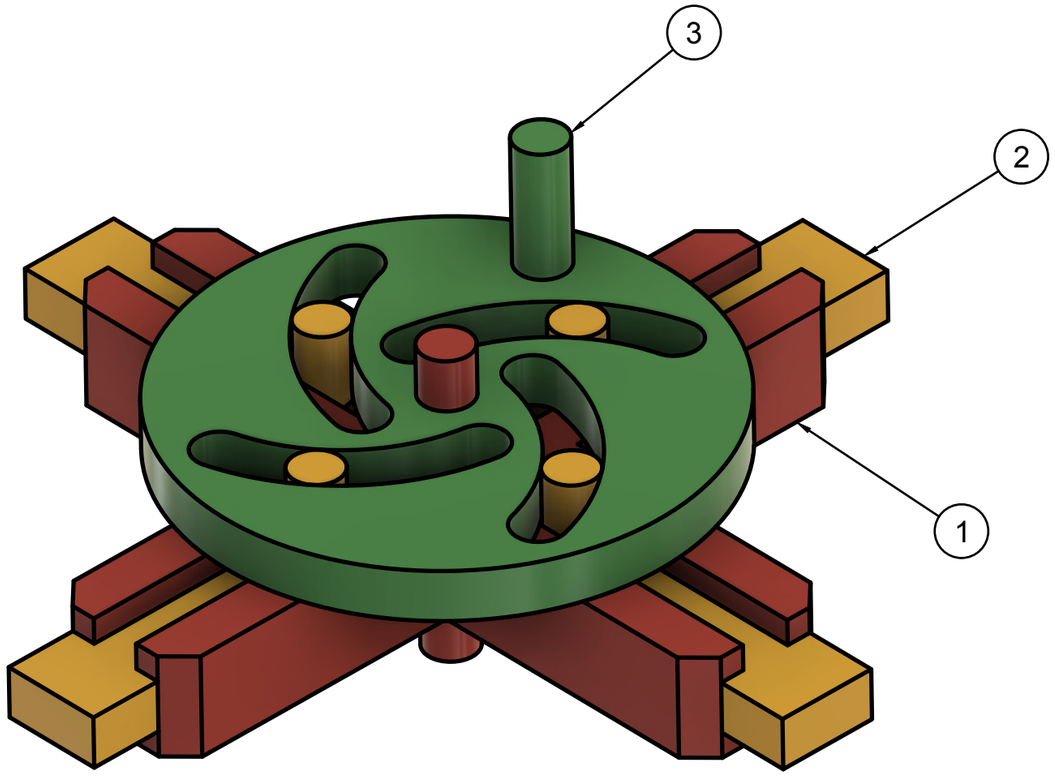

Item	Qty	Part Number	Material
3	1	External3	Steel
2	4	External2	Steel
1	1	External1	Steel

Parts List

General Tolerances		
Weld constr. ISO 5817 Class C	Castings ISO 8062 CT12	Threads ISO 965 6H/6g
Linear and angular dimensions		
Machined with cutting tools (does not include sawing)	ISO 2768-1-m	
Machined with non cutting tools (includes sawing)	ISO 2768-1-v	
Broken edges and angular dimensions	ISO 2768-1-c	

School subject: CAD1/CAD2

Scale: 1:1

PERSTORP TEKNISKA GYMNASIUM

First angle projection

Created by: Jorgen Nilsson

Approved by:

Document type: FUSION 360 Drawing

Approved date:

Title: D2 - Camslot

Assembly exercise

DWG No.: PG-24141

Rev.	Date of issue	Sheet
0	2024-03-13	1/2

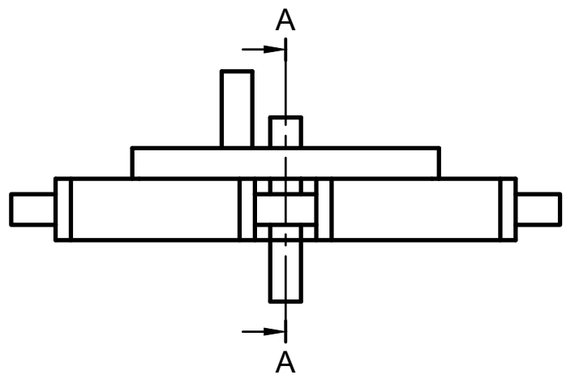

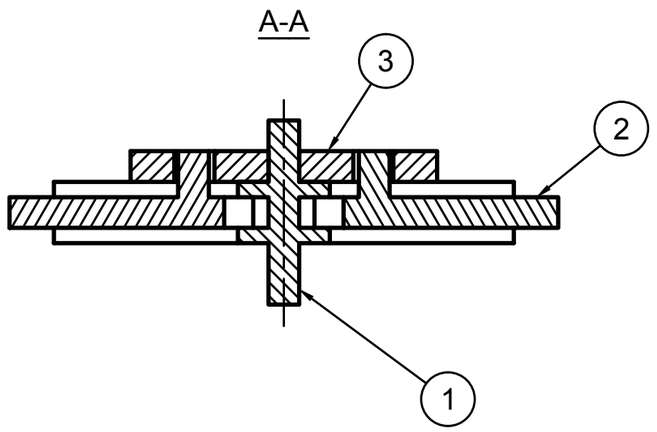



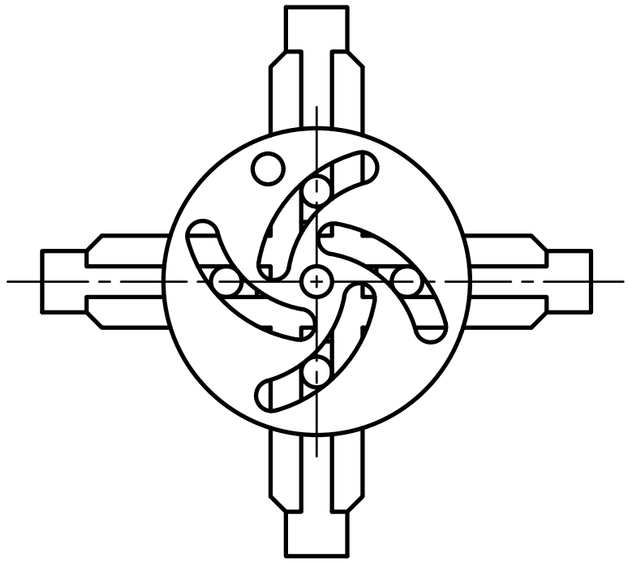

Item	Qty	Part Number	Material
3	1	External3	Steel
2	4	External2	Steel
1	1	External1	Steel

Parts List

General Tolerances		
Weld constr. ISO 5817 Class C	Castings ISO 8062 CT12	Threads ISO 965 6H/6g
Linear and angular dimensions		
Machined with cutting tools (does not include sawing)	ISO 2768-1-m	
Machined with non cutting tools (includes sawing)	ISO 2768-1-v	
Broken edges and angular dimensions	ISO 2768-1-c	

School subject: CAD1/CAD2

Scale: 1:2

PERSTORP TEKNISKA GYMNASIUM

First angle projection

Created by: Jorgen Nilsson

Approved by:

Document type: FUSION 360 Drawing

Approved date:

Title: D2 - Camslot

Assembly exercise

DWG No.: PG-24141

Rev.	Date of issue	Sheet
0	2024-03-13	2/2

This drawing is Perstorp Tekniska Gymnasium property and is protected according to existing law and may not without our approval be copied, imparted anyone or used without authorization

Revision history			
Rev.	Description	Created by	Rev. date

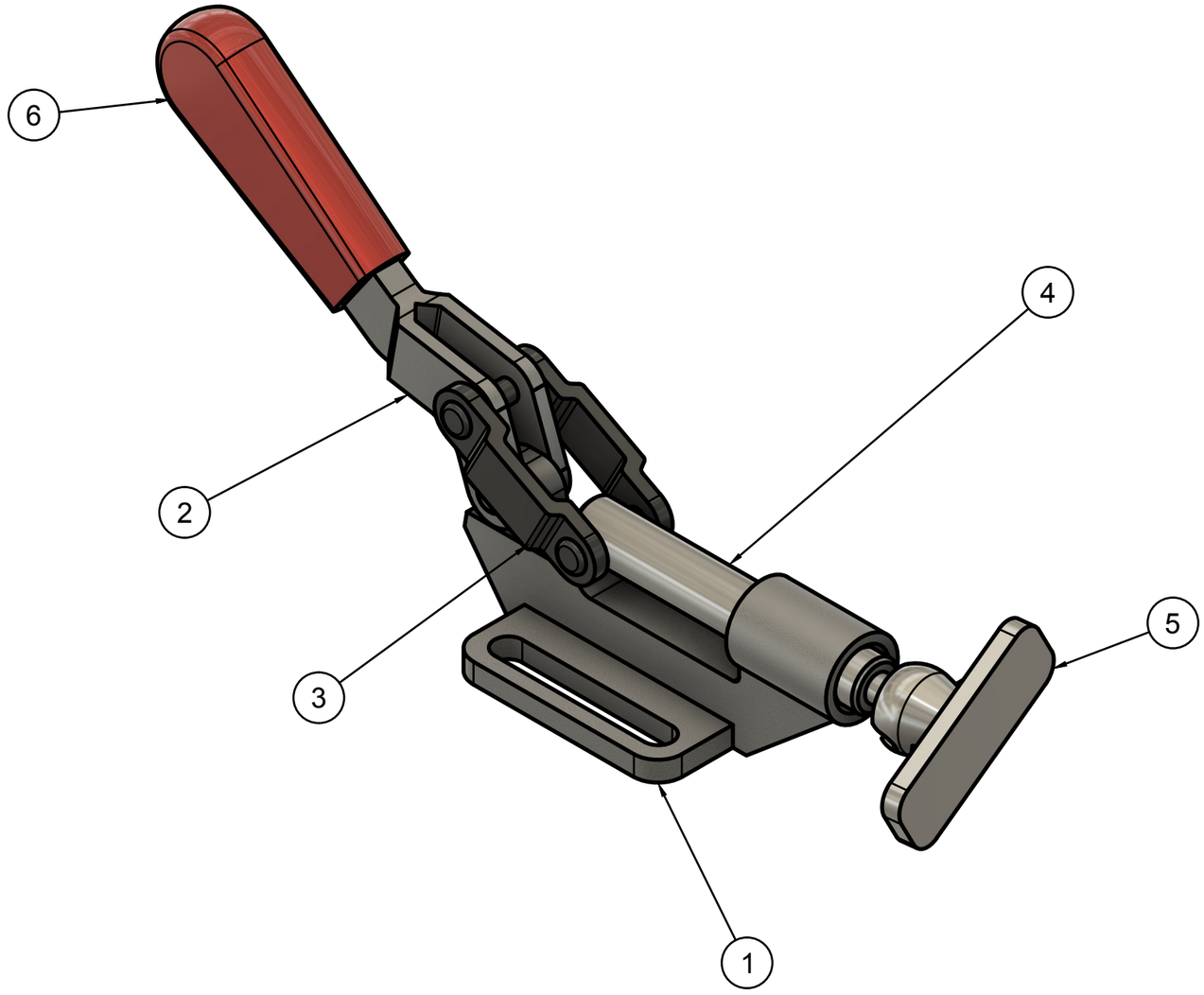

Item	Qty	Part Number	Material
6	1	Grip	Steel
5	1	Clamp	Aluminum 6061
4	1	Shaft	Stainless Steel
3	1	Connector	Stainless Steel, Austenitic
2	1	Lever	Stainless Steel, Austenitic
1	1	Base	Steel, Cast

Parts List

General Tolerances		
Weld constr. ISO 5817 Class C	Castings ISO 8062 CT12	Threads ISO 965 6H/6g
Linear and angular dimensions		
Machined with cutting tools (does not include sawing)	ISO 2768-1-m	
Machined with non cutting tools (includes sawing)	ISO 2768-1-v	
Broken edges and angular dimensions	ISO 2768-1-c	

School subject: CAD1/CAD2

Scale: 1:2

PERSTORP TEKNISKA GYMNASIUM

First angle projection

Created by: Jorgen Nilsson

Approved by:

Document type: FUSION 360 Drawing

Approved date:

Title: D3 - Hand press

Assembly exercise

DWG No.: PG-24155

Rev.	Date of issue	Sheet
0	2024-04-09	1/2

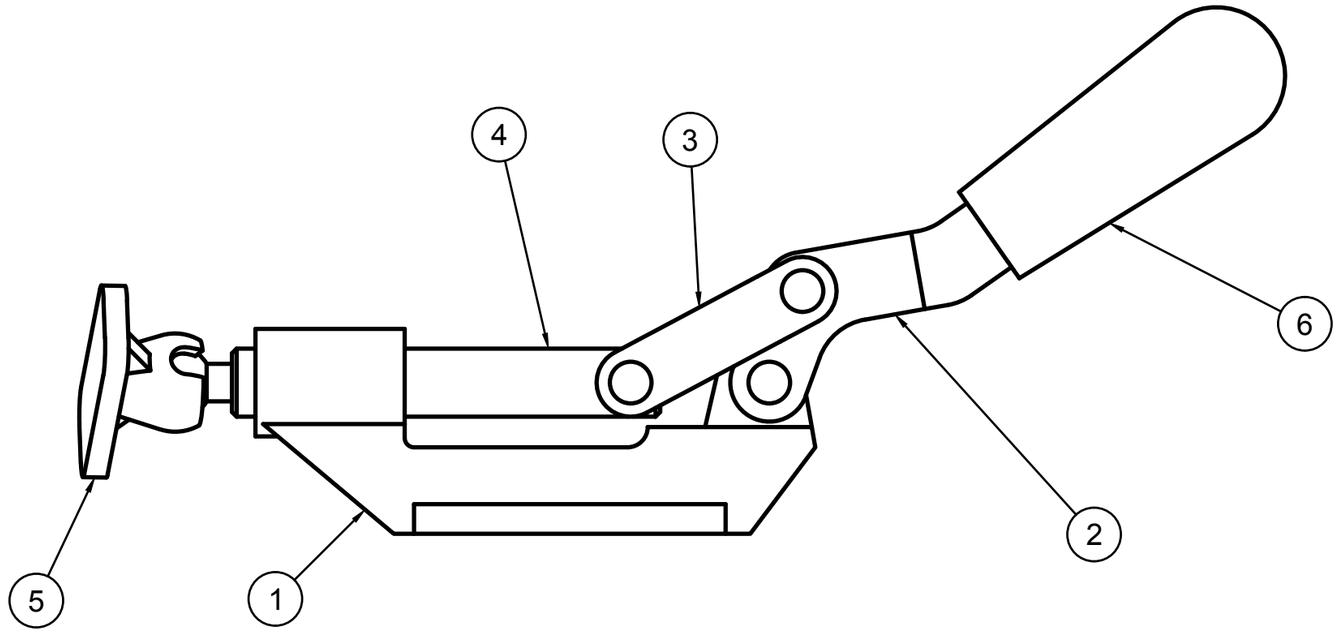

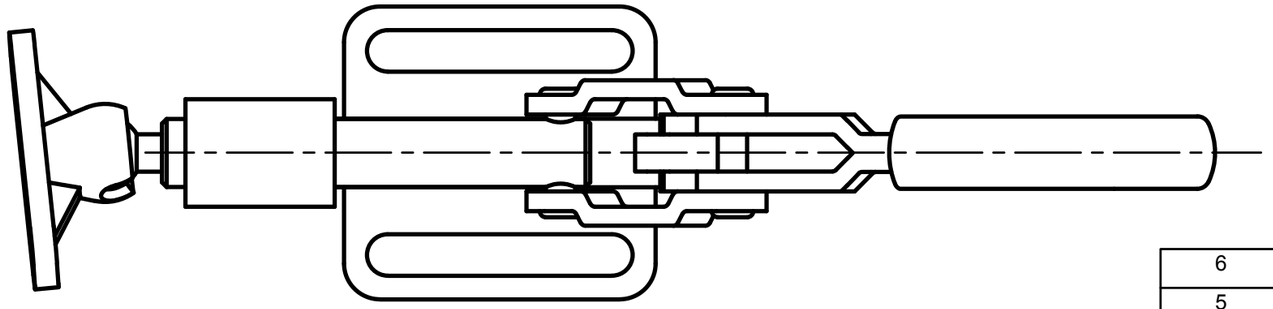

Item	Qty	Part Number	Material
6	1	Grip	Steel
5	1	Clamp	Aluminum 6061
4	1	Shaft	Stainless Steel
3	1	Connector	Stainless Steel, Austenitic
2	1	Lever	Stainless Steel, Austenitic
1	1	Base	Steel, Cast

Parts List

General Tolerances		
Weld constr. ISO 5817 Class C	Castings ISO 8062 CT12	Threads ISO 965 6H/6g
Linear and angular dimensions		
Machined with cutting tools (does not include sawing)	ISO 2768-1-m	
Machined with non cutting tools (includes sawing)	ISO 2768-1-v	
Broken edges and angular dimensions	ISO 2768-1-c	

School subject: CAD1/CAD2

Scale: 1:2

PERSTORP TEKNISKA GYMNASIUM

First angle projection

Created by: Jorgen Nilsson

Approved by:

Document type: FUSION 360 Drawing

Approved date:

Title: D3 - Hand press

Assembly exercise

DWG No.: PG-24155

Rev.	Date of issue	Sheet
0	2024-04-09	2/2

This drawing is Perstorp Tekniska Gymnasium property and is protected according to existing law and may not without our approval be copied, imparted anyone or used without authorization

Revision history			
Rev.	Description	Created by	Rev. date

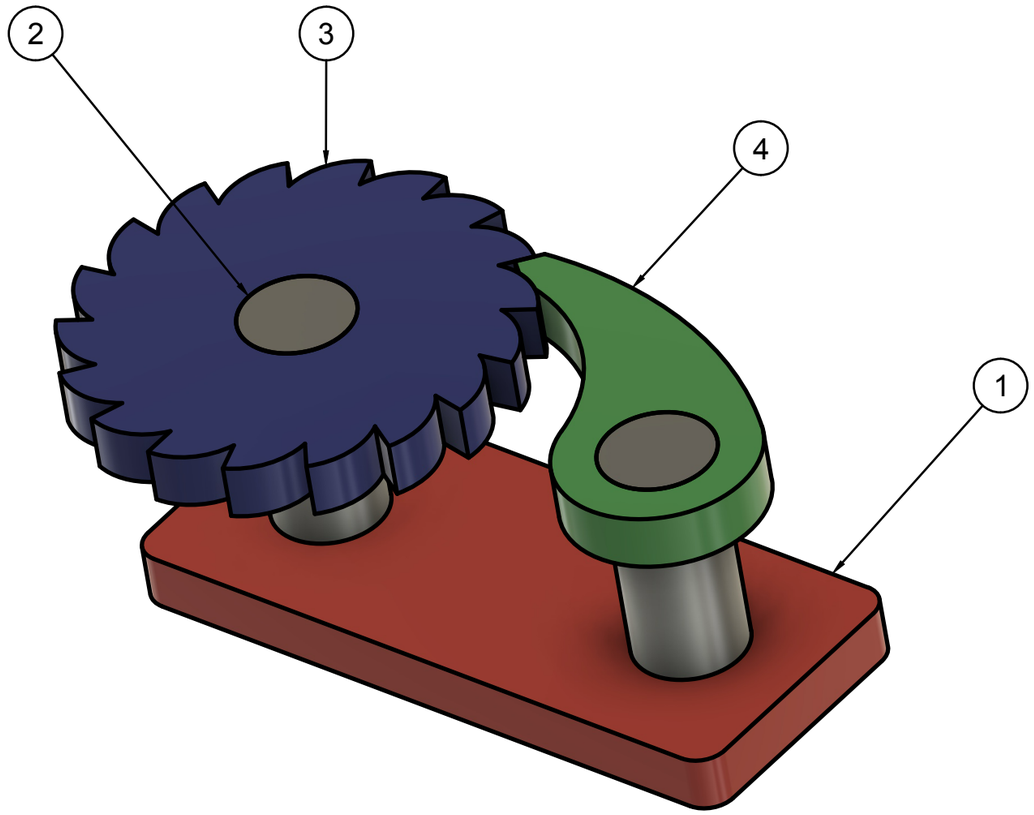

Item	Qty	Part Number	Material
4	1	Stopper	Steel
3	1	Wheel	Steel
2	2	Shaft	Steel
1	1	Baseplate	Steel

Parts List

General Tolerances		
Weld constr. ISO 5817 Class C	Castings ISO 8062 CT12	Threads ISO 965 6H/6g
Linear and angular dimensions		
Machined with cutting tools (does not include sawing)	ISO 2768-1-m	
Machined with non cutting tools (includes sawing)	ISO 2768-1-v	
Broken edges and angular dimensions	ISO 2768-1-c	

School subject: CAD1/CAD2

Scale: 1:1

PERSTORP TEKNISKA GYMNASIUM

First angle projection

Created by: Jorgen Nilsson

Approved by:

Document type: FUSION 360 Drawing

Approved date:

Title: D4 - Rachet wheel

Assembly exercise

DWG No.: PG-24140

Rev.	Date of issue	Sheet
0	2024-03-13	1/2

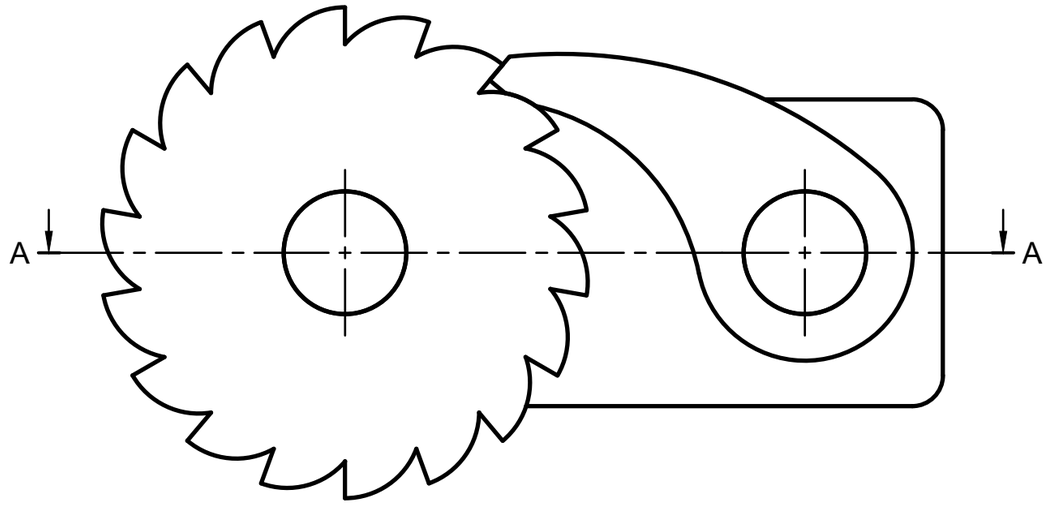

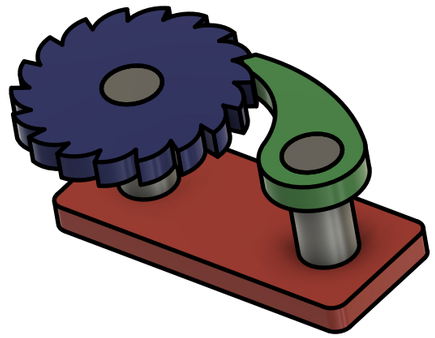

A-A

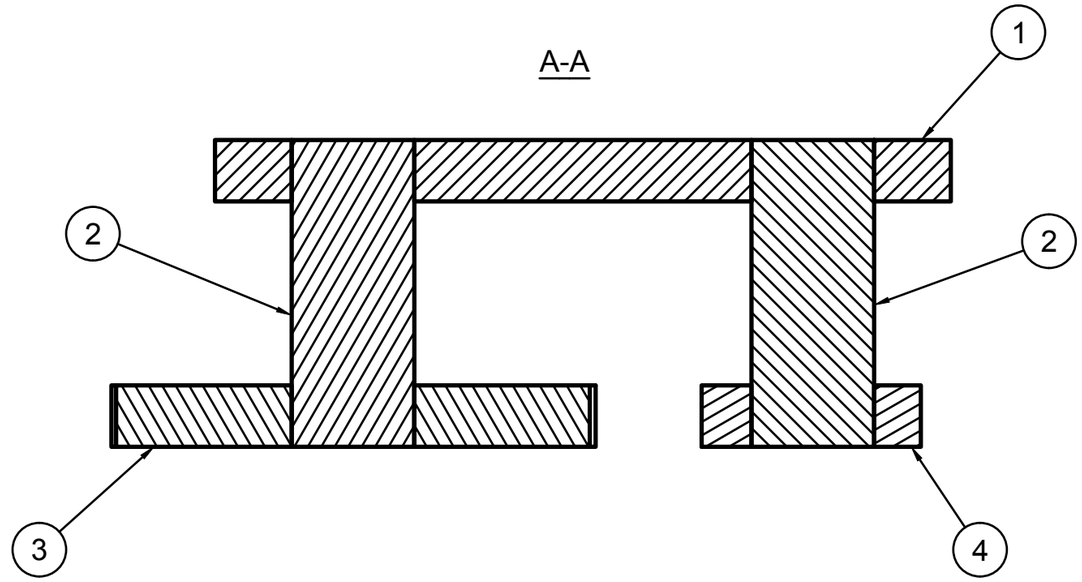

Item	Qty	Part Number	Material
4	1	Stopper	Steel
3	1	Wheel	Steel
2	2	Shaft	Steel
1	1	Baseplate	Steel

Parts List

General Tolerances		
Weld constr. ISO 5817 Class C	Castings ISO 8062 CT12	Threads ISO 965 6H/6g
Linear and angular dimensions		
Machined with cutting tools (does not include sawing)	ISO 2768-1-m	
Machined with non cutting tools (includes sawing)	ISO 2768-1-v	
Broken edges and angular dimensions	ISO 2768-1-c	

School subject: CAD1/CAD2

Scale: 1:1

PERSTORP TEKNISKA GYMNASIUM

First angle projection

Created by: Jorgen Nilsson

Approved by:

Document type: FUSION 360 Drawing

Approved date:

Title: D4 - Rachet wheel

Assembly exercise

DWG No.: PG-24140

Rev.: 0

Date of issue: 2024-03-13

Sheet: 2/2

This drawing is Perstorp Tekniska Gymnasium property and is protected according to existing law and may not without our approval be copied, imparted anyone or used without authorization

Revision history			
Rev.	Description	Created by	Rev. date

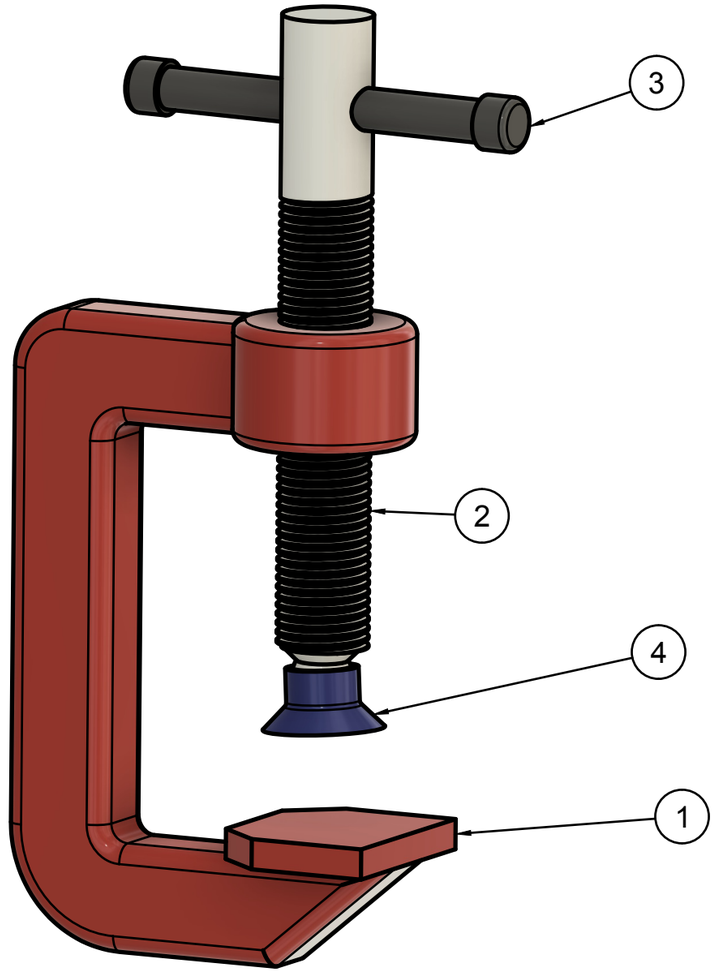

Item	Qty	Part Number	Material
4	1	Hylsa	Steel
3	1	Handtag	Steel
2	1	Skruv	Steel
1	1	C-järn	Steel

Parts List

General Tolerances		
Weld constr. ISO 5817 Class C	Castings ISO 8062 CT12	Threads ISO 965 6H/6g
Linear and angular dimensions		
Machined with cutting tools (does not include sawing)	ISO 2768-1-m	
Machined with non cutting tools (includes sawing)	ISO 2768-1-v	
Broken edges and angular dimensions	ISO 2768-1-c	

School subject: CAD1/CAD2

Scale: 1:1

PERSTORP TEKNISKA GYMNASIUM

First angle projection

Created by: Jorgen Nilsson

Approved by:

Document type: FUSION 360 Drawing

Approved date:

Title: D5 - Skruvtving

Assembly exercise

DWG No.: PG-24204

Rev.: 0

Date of issue: 2024-08-08

Sheet: 1/1

This drawing is Perstorp Tekniska Gymnasium property and is protected according to existing law and may not without our approval be copied, imparted anyone or used without authorization

Revision history			
Rev.	Description	Created by	Rev. date

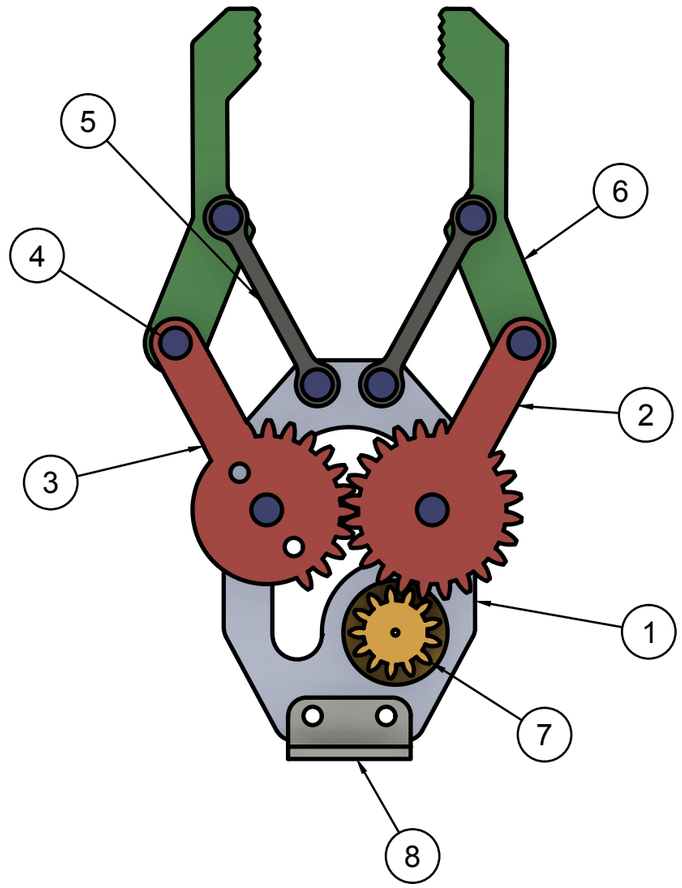

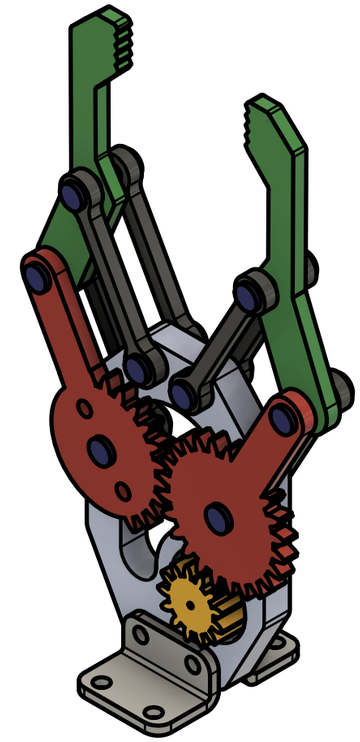

Item	Qty	Part Number	Material
8	2	Stand	Steel
7	1	Wheel 3	Steel
6	2	Jaw	Steel
5	6	Link	Steel
4	8	Pin	Steel
3	1	Wheel 2	Steel
2	1	Wheel 1	Steel
1	1	Baseplate	Steel

Parts List

General Tolerances		
Weld constr. ISO 5817 Class C	Castings ISO 8062 CT12	Threads ISO 965 6H/6g
Linear and angular dimensions		
Machined with cutting tools (does not include sawing)	ISO 2768-1-m	
Machined with non cutting tools (includes sawing)	ISO 2768-1-v	
Broken edges and angular dimensions	ISO 2768-1-c	

School subject: CAD1/CAD2

Scale: 1:1

PERSTORP TEKNISKA GYMNASIUM

First angle projection

Created by: Jorgen Nilsson

Approved by:

Document type: FUSION 360 Drawing

Approved date:

Title: D6 - Gripdon

Assembly exercise

DWG No.: PG-24100

Rev.	Date of issue	Sheet
0	2023-12-02	1/1

This drawing is Perstorp Tekniska Gymnasium property and is protected according to existing law and may not without our approval be copied, imparted anyone or used without authorization

Revision history			
Rev.	Description	Created by	Rev. date

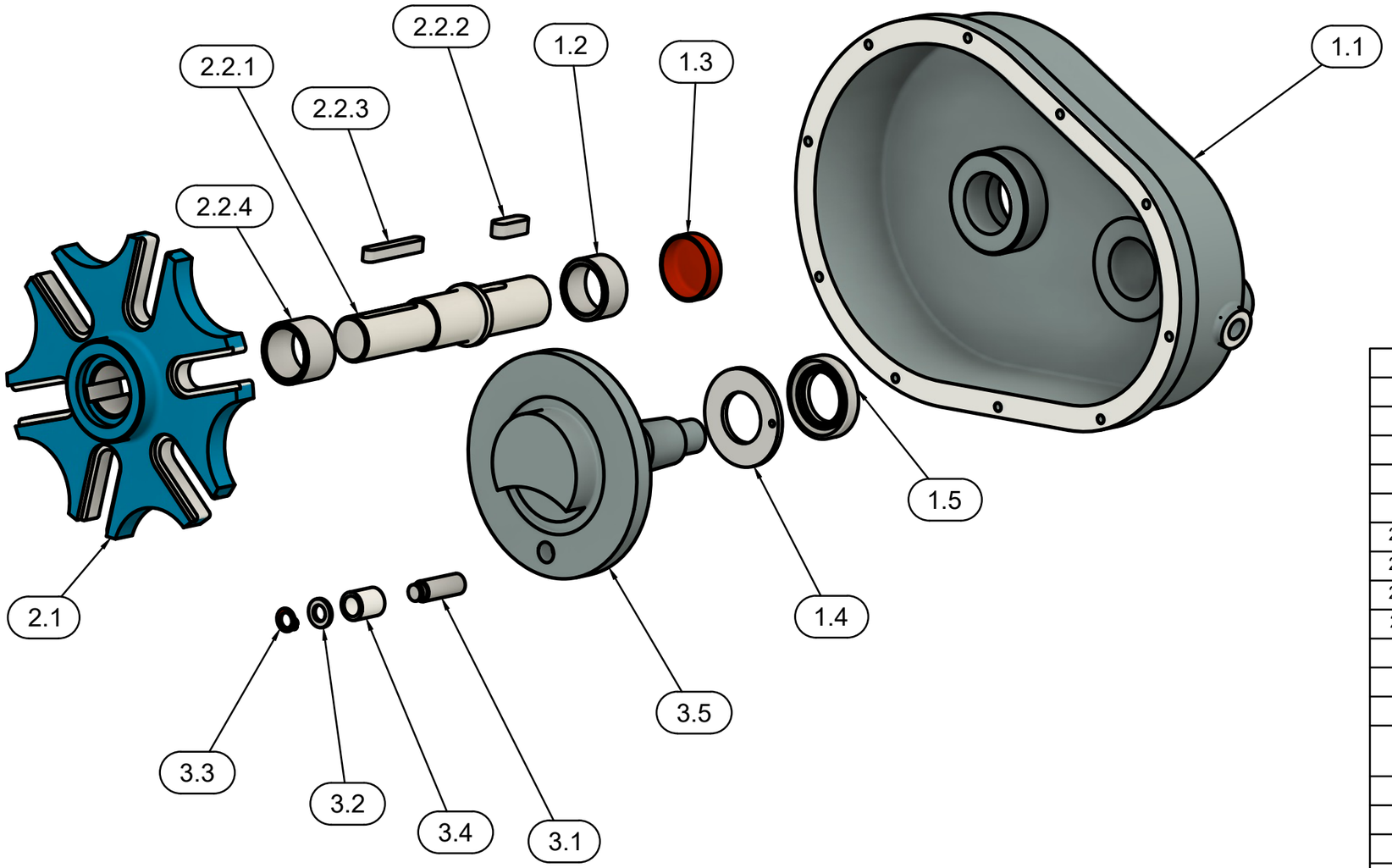

Item	Qty	Part Number	Material
3.5	1	0802-03P	Steel
3.4	1	0802-06P	Steel
3.3	1	DIN 471 <= 9mm 8 x 0	Steel
3.2	1	DIN 125-1 A A 7	Steel
3.1	1	0208-05P	Steel
3	1	Rotor	Steel
2.2.4	1	Din 1850 - G 25x30x20	Steel
2.2.3	1	DIN 6885 6x6x40	Steel
2.2.2	1	DIN 6885 8x7x22	Steel
2.2.1	1	0208-02P	Steel
2.2	1	0208-01A	Steel
2.1	1	0208-01P	Steel
2	1	Cross	Steel
1.5	1	DIN 3760 AS (Right) AS - 25 x 40 x 7 - NBR	Steel
1.4	1	0802-04P	Steel
1.3	1	0208-03P	Steel
1.2	1	Din 1850 - G 24x30x15	Steel
1.1	1	0208-00P	Steel
1	1	Frame	Steel

Parts List

General Tolerances

Weld constr. ISO 5817 Class C	Castings ISO 8062 CT12	Threads ISO 965 6H/6g

Linear and angular dimensions

Machined with cutting tools (does not include sawing)	ISO 2768-1-m
Machined with non cutting tools (includes sawing)	ISO 2768-1-v
Broken edges and angular dimensions	ISO 2768-1-c

School subject: CAD1/CAD2

Scale: 1:2.5

PERSTORP TEKNISKA GYMNASIUM

First angle projection

Created by: Jorgen Nilsson

Approved by:

Document type: FUSION 360 Drawing

Approved date:

Title: D7 - Geneva joint

Assembly exercise

DWG No.: PG-24202

Rev.	Date of issue	Sheet
0	2024-06-27	1/2

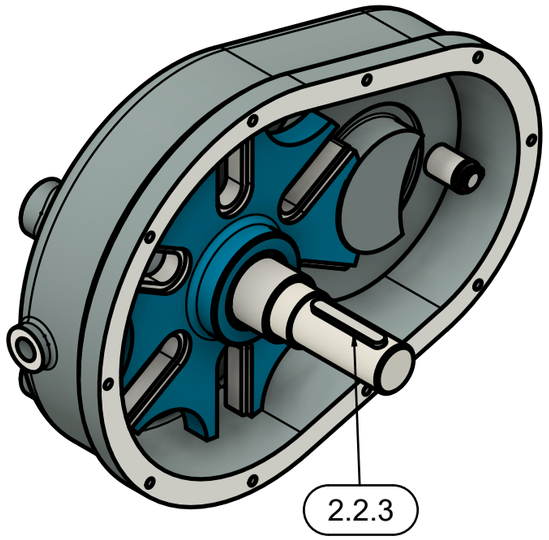

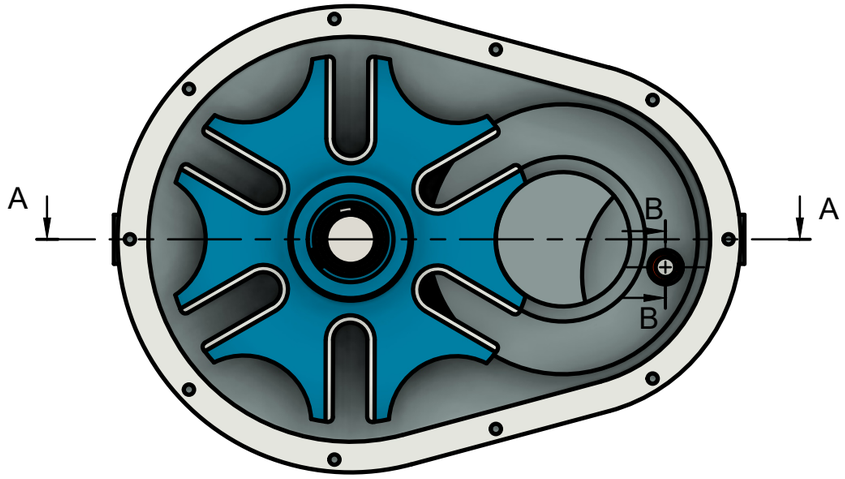

B-B (1:1)

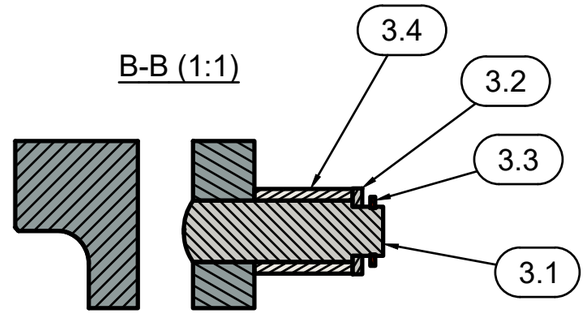

A-A

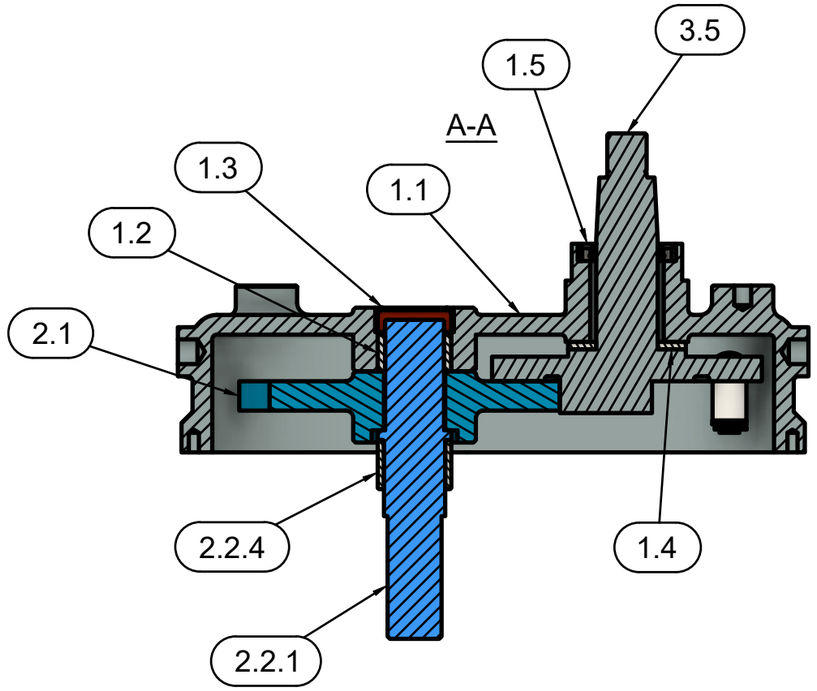

Item	Qty	Part Number	Material
3.5	1	0802-03P	Steel
3.4	1	0802-06P	Steel
3.3	1	DIN 471 <= 9mm 8 x 0	Steel
3.2	1	DIN 125-1 A A 7	Steel
3.1	1	0208-05P	Steel
3	1	Rotor	Steel
2.2.4	1	Din 1850 - G 25x30x20	Steel
2.2.3	1	DIN 6885 6x6x40	Steel
2.2.2	1	DIN 6885 8x7x22	Steel
2.2.1	1	0208-02P	Steel
2.2	1	0208-01A	Steel
2.1	1	0208-01P	Steel
2	1	Cross	Steel
1.5	1	DIN 3760 AS (Right) AS - 25 x 40 x 7 - NBR	Steel
1.4	1	0802-04P	Steel
1.3	1	0208-03P	Steel
1.2	1	Din 1850 - G 24x30x15	Steel
1.1	1	0208-00P	Steel
1	1	Frame	Steel

Parts List

General Tolerances		
Weld constr. ISO 5817 Class C	Castings ISO 8062 CT12	Threads ISO 965 6H/6g
Linear and angular dimensions		
Machined with cutting tools (does not include sawing)	ISO 2768-1-m	
Machined with non cutting tools (includes sawing)	ISO 2768-1-v	
Broken edges and angular dimensions	ISO 2768-1-c	

School subject: CAD1/CAD2

Scale: 1:2.5

PERSTORP TEKNISKA GYMNASIUM

First angle projection

Created by: Jorgen Nilsson

Document type: FUSION 360 Drawing

Title: D7 - Geneva joint

Assembly exercise

Approved by:

Approved date:

DWG No.: PG-24202

Rev.	Date of issue	Sheet
0	2024-06-27	2/2

This drawing is Perstorp Tekniska Gymnasium property and is protected according to existing law and may not without our approval be copied, imparted anyone or used without authorization

Revision history			
Rev.	Description	Created by	Rev. date

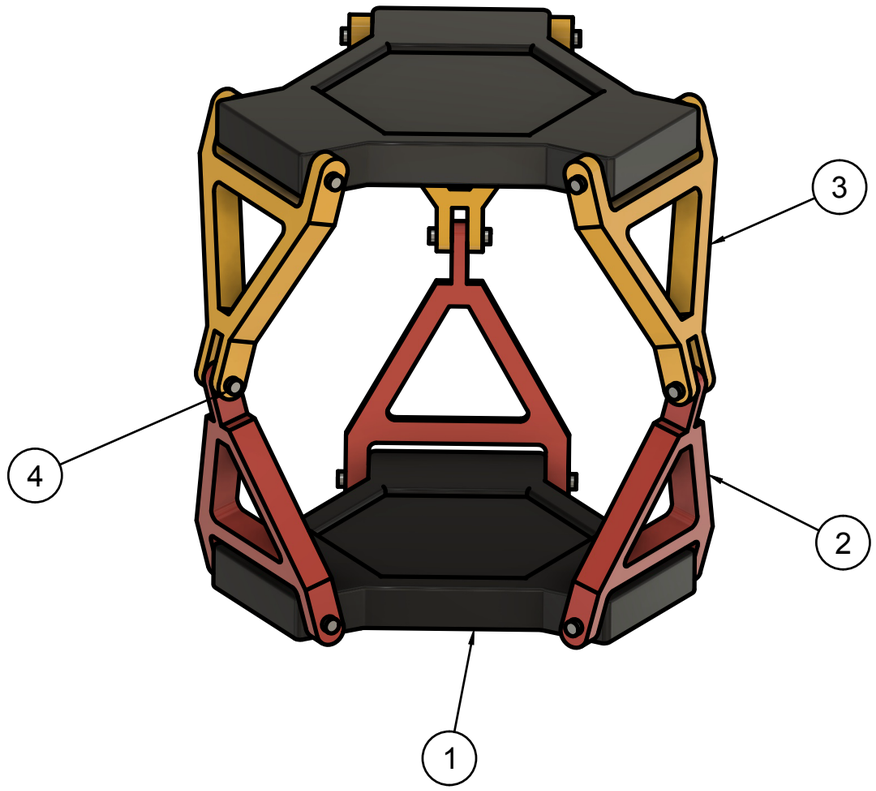

Item	Qty	Part Number	Material
4	3	Component6	Steel
3	3	Component5	Steel
2	3	Component2	Steel
1	2	Component1	Steel

Parts List

General Tolerances		
Weld constr. ISO 5817 Class C	Castings ISO 8062 CT12	Threads ISO 965 6H/6g
Linear and angular dimensions		
Machined with cutting tools (does not include sawing)	ISO 2768-1-m	
Machined with non cutting tools (includes sawing)	ISO 2768-1-v	
Broken edges and angular dimensions	ISO 2768-1-c	

School subject: CAD1/CAD2

Scale: 1:4

PERSTORP TEKNISKA GYMNASIUM

First angle projection

Created by: Jorgen Nilsson

Approved by:

Document type: FUSION 360 Drawing

Approved date:

Title: D8 - TriangularPodium

Assembly exercise

DWG No.: PG-24205

Rev.	Date of issue	Sheet
0	2024-08-11	1/1

This drawing is Perstorp Tekniska Gymnasium property and is protected according to existing law and may not without our approval be copied, imparted anyone or used without authorization

Revision history			
Rev.	Description	Created by	Rev. date

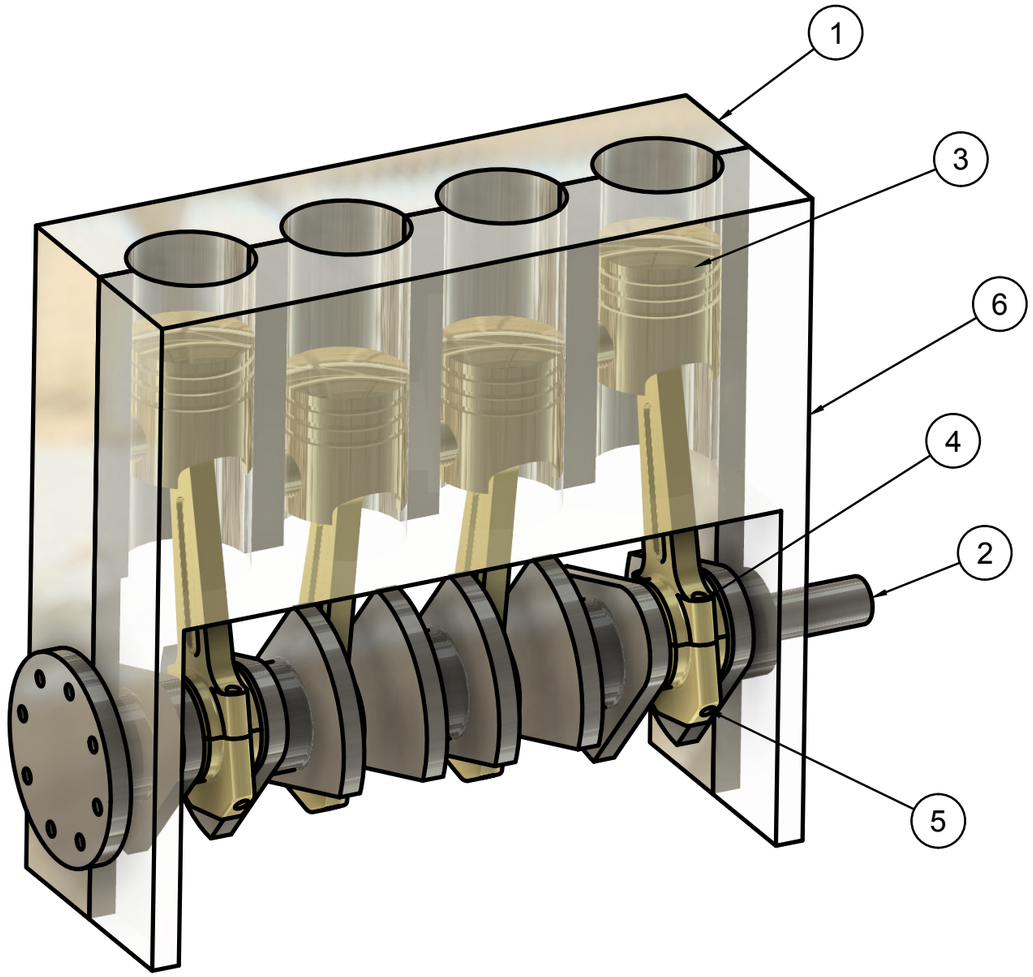

Item	Qty	Part Number	Material
6	1	Motorblockshalva 2	Glass
5	4	Vevstake bakände	Generic
4	4	Vevstake	Generic
3	4	Kolv	Generic
2	1	Vevaxel	Generic
1	1	Motorblockshalva 1	Generic

Parts List

General Tolerances		
Weld constr. ISO 5817 Class C	Castings ISO 8062 CT12	Threads ISO 965 6H/6g
Linear and angular dimensions		
Machined with cutting tools (does not include sawing)	ISO 2768-1-m	
Machined with non cutting tools (includes sawing)	ISO 2768-1-v	
Broken edges and angular dimensions	ISO 2768-1-c	

School subject: CAD1/CAD2

Scale: 1:4

PERSTORP TEKNISKA GYMNASIUM

First angle projection

Created by: Jorgen Nilsson

Approved by:

Document type: FUSION 360 Drawing

Approved date:

Title: D9 - Kolvmotor

Assembly exercise

DWG No.: PG-24206

Rev.	Date of issue	Sheet
0	2024-08-11	1/1

This drawing is Perstorp Tekniska Gymnasium property and is protected according to existing law and may not without our approval be copied, imparted anyone or used without authorization

Revision history			
Rev.	Description	Created by	Rev. date

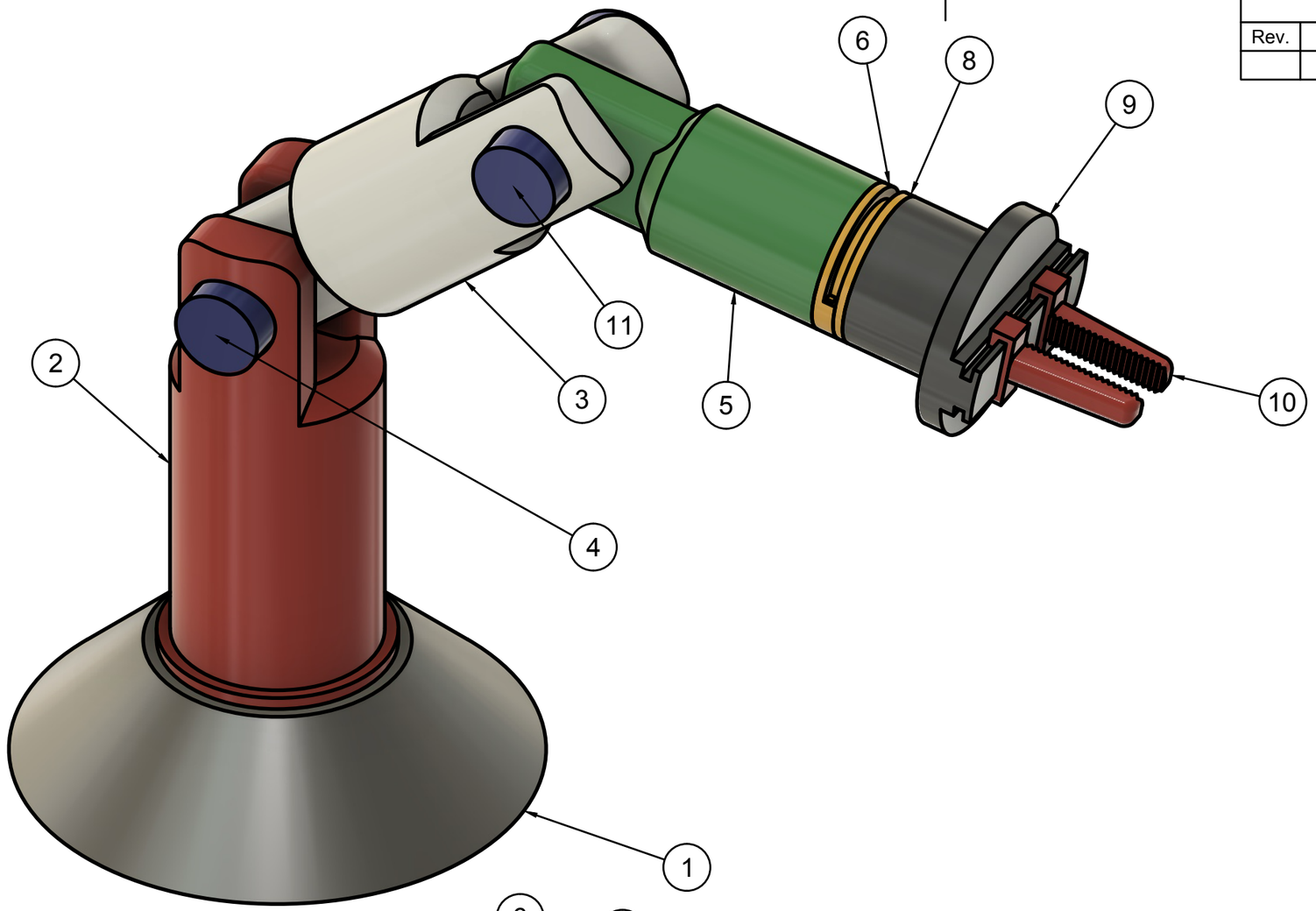

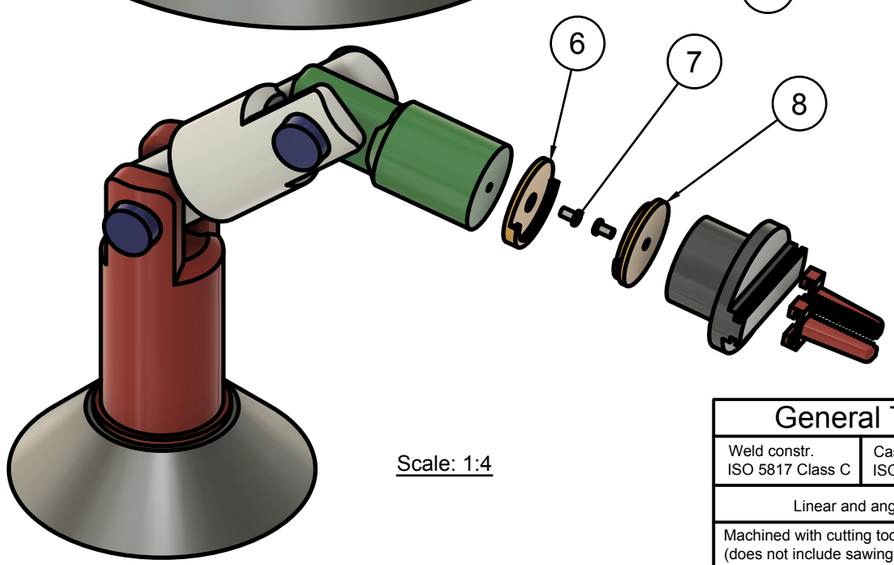

Scale: 1:4

Item	Qty	Description	Material
11	1	Pin 2	Steel
10	2	Gripper	Steel
9	1	Arm 4	Steel
8	1	Lock 2	Steel
7	2	Nut	Steel
6	1	Lock	Steel
5	1	Arm 3	Steel
4	1	Pin 1	Steel
3	1	Arm 2	Steel
2	1	Arm 1	Steel
1	1	Base	Steel

Parts List

General Tolerances		
Weld constr. ISO 5817 Class C	Castings ISO 8062 CT12	Threads ISO 965 6H/6g
Linear and angular dimensions		
Machined with cutting tools (does not include sawing)		ISO 2768-1-m
Machined with non cutting tools (includes sawing)		ISO 2768-1-v
Broken edges and angular dimensions		ISO 2768-1-c

School subject	CAD1/CAD2
Scale	1:2
	PERSTORP TEKNISKA GYMNASIUM
First angle projection	

Created by	Jorgen Nilsson
Approved by	
Document type	FUSION 360 Drawing
Approved date	
Title	D10 - Robotarm Assembly exercise
DWG No.	PG-23115
Rev.	0
Date of issue	2024-04-10
Sheet	1/1

This drawing is Perstorp Tekniska Gymnasium property and is protected according to existing law and may not without our approval be copied, imparted anyone or used without authorization

Revision history			
Rev.	Description	Created by	Rev. date

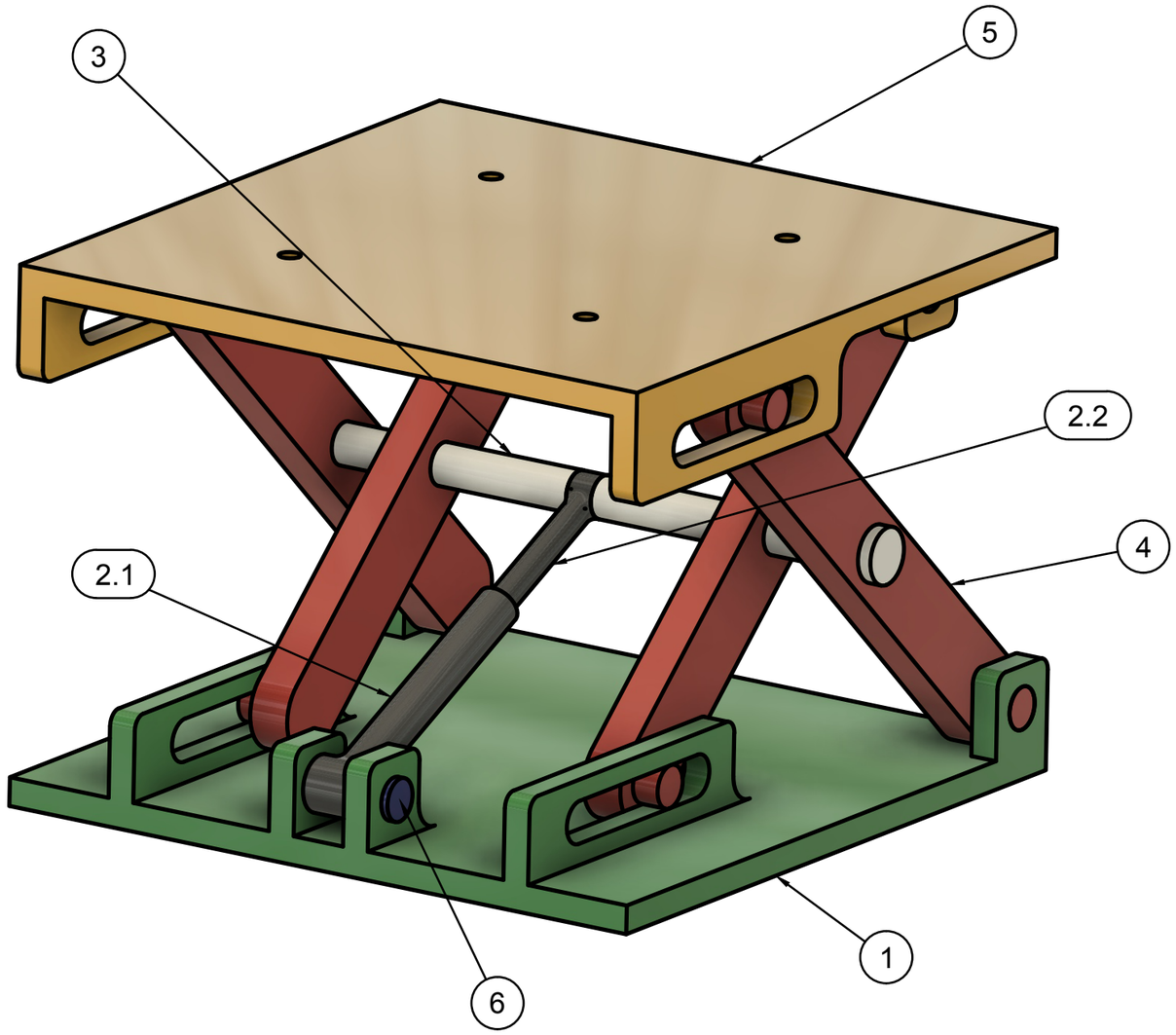

Item	Qty	Part Number	Material
6	1	Cylinder pin	Steel
5	1	Top table	Steel
4	4	Linkage	Steel
3	1	Linkage pin	Steel
2.2	1	Cylinder male	Steel
2.1	1	Cylinder female	Steel
2	1	Cylinder	Steel
1	1	Bottom base	Steel

Parts List

General Tolerances		
Weld constr. ISO 5817 Class C	Castings ISO 8062 CT12	Threads ISO 965 6H/6g
Linear and angular dimensions		
Machined with cutting tools (does not include sawing)	ISO 2768-1-m	
Machined with non cutting tools (includes sawing)	ISO 2768-1-v	
Broken edges and angular dimensions	ISO 2768-1-c	

School subject: CAD1/CAD2

Scale: 1:4

PERSTORP TEKNISKA GYMNASIUM

First angle projection

Created by: Jorgen Nilsson

Approved by:

Document type: FUSION 360 Drawing

Approved date:

Title: D11 - Saxlyft

Assembly exercise

DWG No.: PG-24207

Rev.	Date of issue	Sheet
0	2024-08-11	1/1

This drawing is Perstorp Tekniska Gymnasium property and is protected according to existing law and may not without our approval be copied, imparted anyone or used without authorization

Revision history			
Rev.	Description	Created by	Rev. date

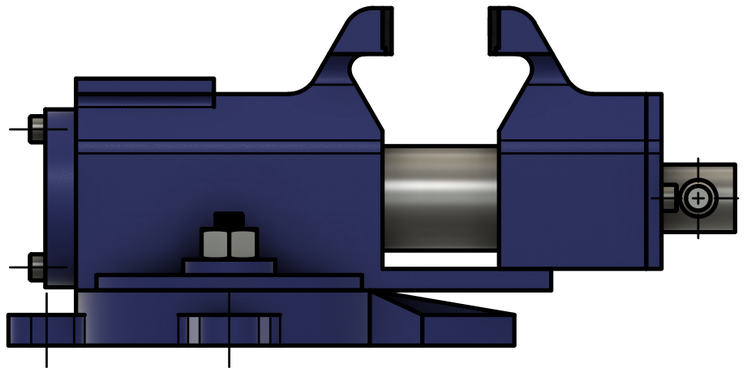

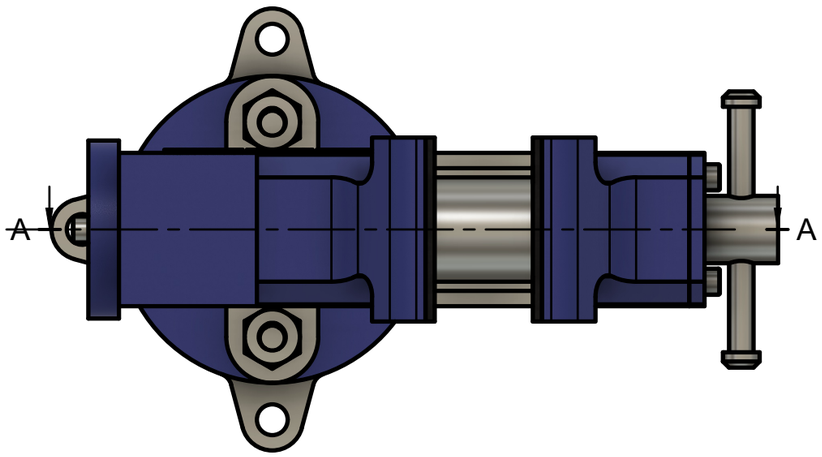

A-A

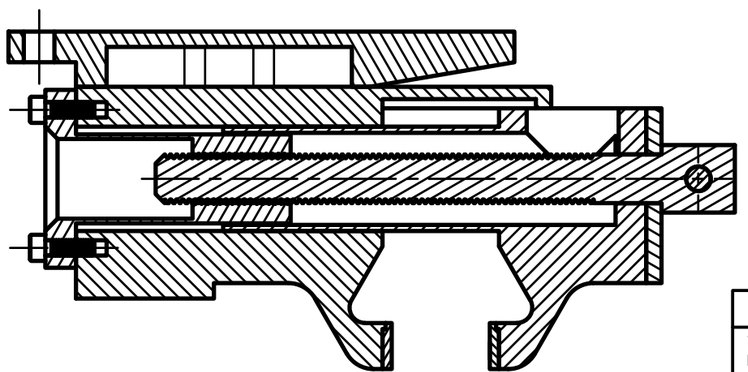

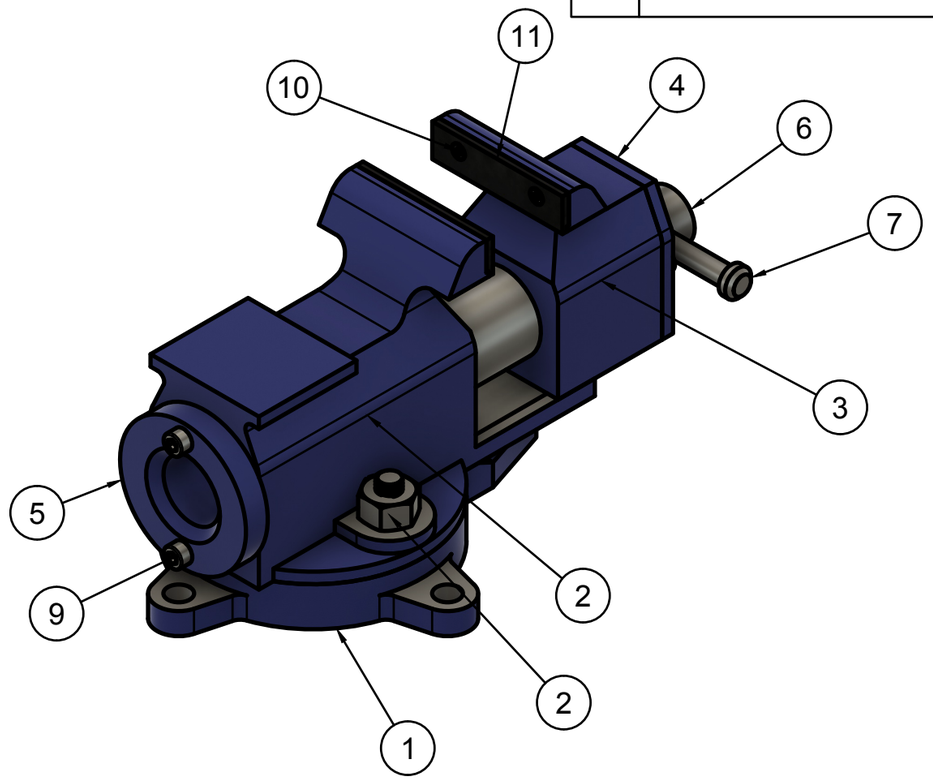

Item	Qty	Part Number	Material
11	2	Rubber Plate	Rubber
10	4	Countersunk Head Screw	Steel 8.8, Plain
9	4	Hexagon Socket Head Cap Screw	Steel 8.8, Plain
8	2	Nut	Steel
7	1	Handle Bar	Steel
6	1	Jaw Screw	Steel
5	1	Vice Nut	Steel
4	1	Jaw Plate	Steel
3	1	Sliding Jaw	Steel
2	1	Fixed Jaw	Steel
1	1	Base	Steel

Parts List

General Tolerances		
Weld constr. ISO 5817 Class C	Castings ISO 8062 CT12	Threads ISO 965 6H/6g
Linear and angular dimensions		
Machined with cutting tools (does not include sawing)	ISO 2768-1-m	
Machined with non cutting tools (includes sawing)	ISO 2768-1-v	
Broken edges and angular dimensions	ISO 2768-1-c	

School subject: CAD1/CAD2

Scale: 1:2

PERSTORP TEKNISKA GYMNASIUM

First angle projection

Created by: Jorgen Nilsson

Approved by:

Document type: FUSION 360 Drawing

Approved date:

Title: D12 - Skruvstäd

Assembly exercise

DWG No.: PG-24211

Rev.	Date of issue	Sheet
0	2024-08-30	1/1

This drawing is Perstorp Tekniska Gymnasium property and is protected according to existing law and may not without our approval be copied, imparted anyone or used without authorization

Revision history			
Rev.	Description	Created by	Rev. date

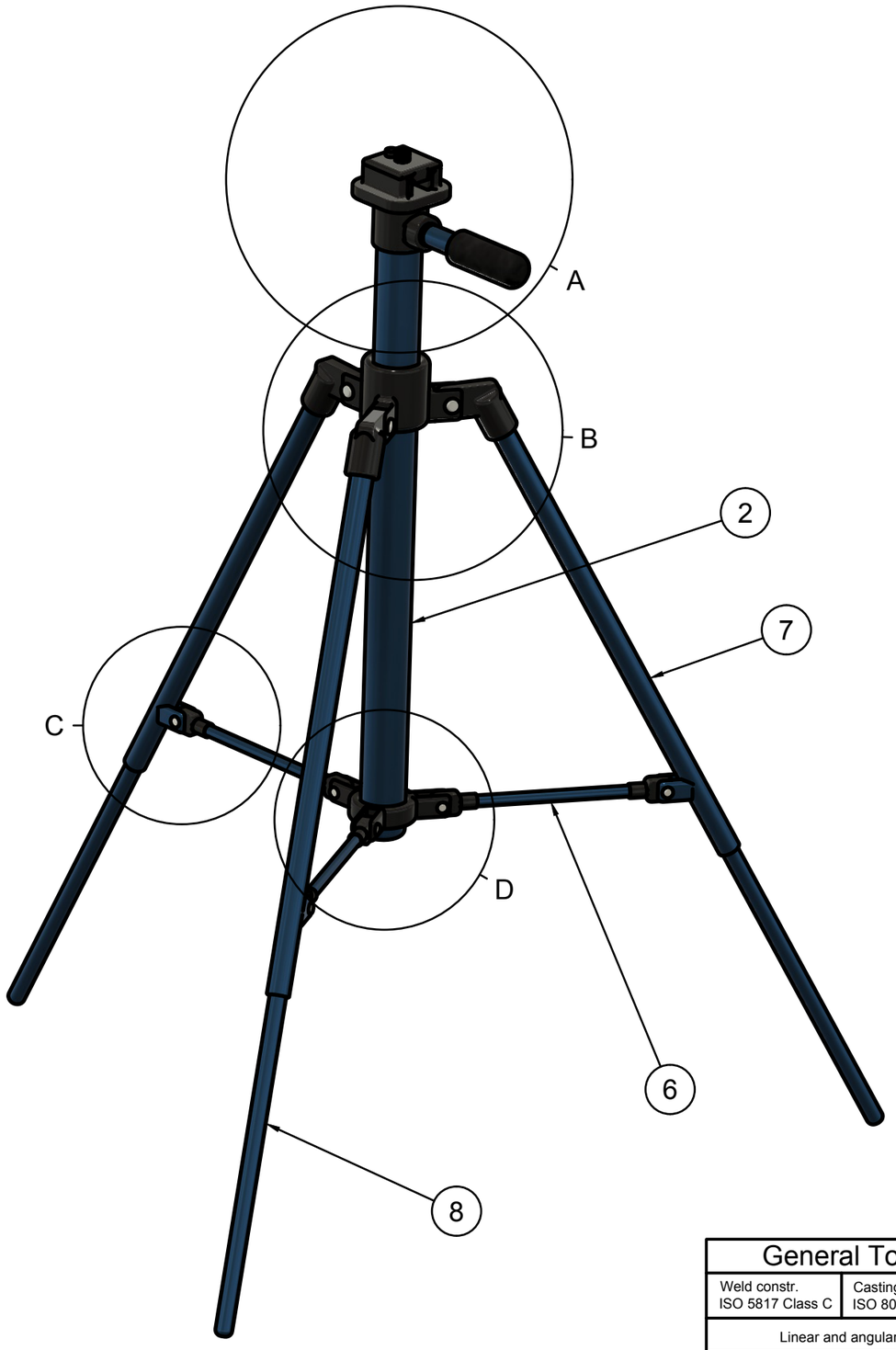

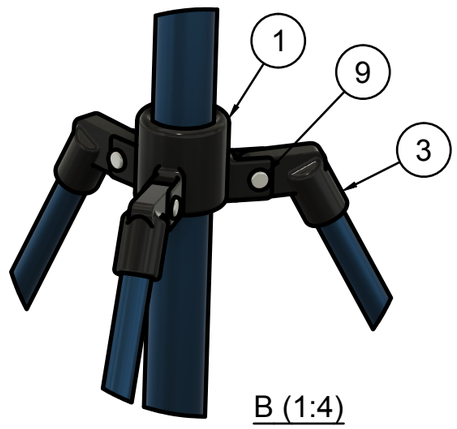

B (1:4)

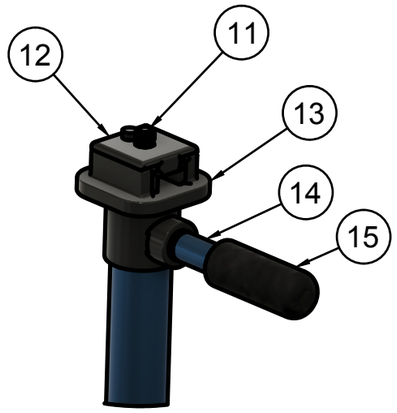

A (1:4)

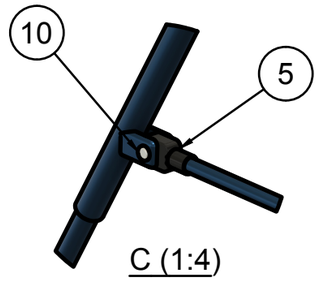

C (1:4)

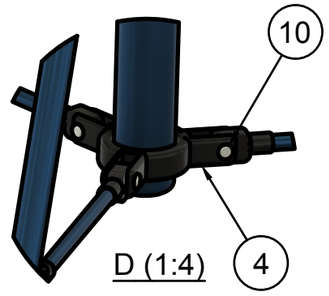

D (1:4)

Item	Qty	Part Number	Material
15	1	Handtag	Steel
14	1	Handtagsrör	Steel
13	1	Handtagskonsol	Steel
12	1	Kamerafäste	Steel
11	1	Toppskruv	Steel
10	6	Nit 2	Steel
9	3	Nit 1	Steel
8	3	Vertikalrör 2	Steel
7	3	Vertikalrör 1	Steel
6	3	Horisontalrör	Steel
5	6	Rörände	Steel
4	1	Centrumled 2	Steel
3	3	Toppled	Steel
2	1	Centrumrör	Steel
1	1	Centrumled 1	Steel

Parts List

General Tolerances		
Weld constr. ISO 5817 Class C	Castings ISO 8062 CT12	Threads ISO 965 6H/6g
Linear and angular dimensions		
Machined with cutting tools (does not include sawing)	ISO 2768-1-m	
Machined with non cutting tools (includes sawing)	ISO 2768-1-v	
Broken edges and angular dimensions	ISO 2768-1-c	

School subject: CAD1/CAD2

Scale: 1:10

PERSTORP TEKNISKA GYMNASIUM

First angle projection

Created by: Jorgen Nilsson

Approved by:

Document type: FUSION 360 Drawing

Approved date:

Title: D13 - Kamerastativ

Assembly exercise

DWG No.: PG-24213

Rev.	Date of issue	Sheet
0	2024-09-06	1/1

This drawing is Perstorp Tekniska Gymnasium property and is protected according to existing law and may not without our approval be copied, imparted anyone or used without authorization

Revision history			
Rev.	Description	Created by	Rev. date

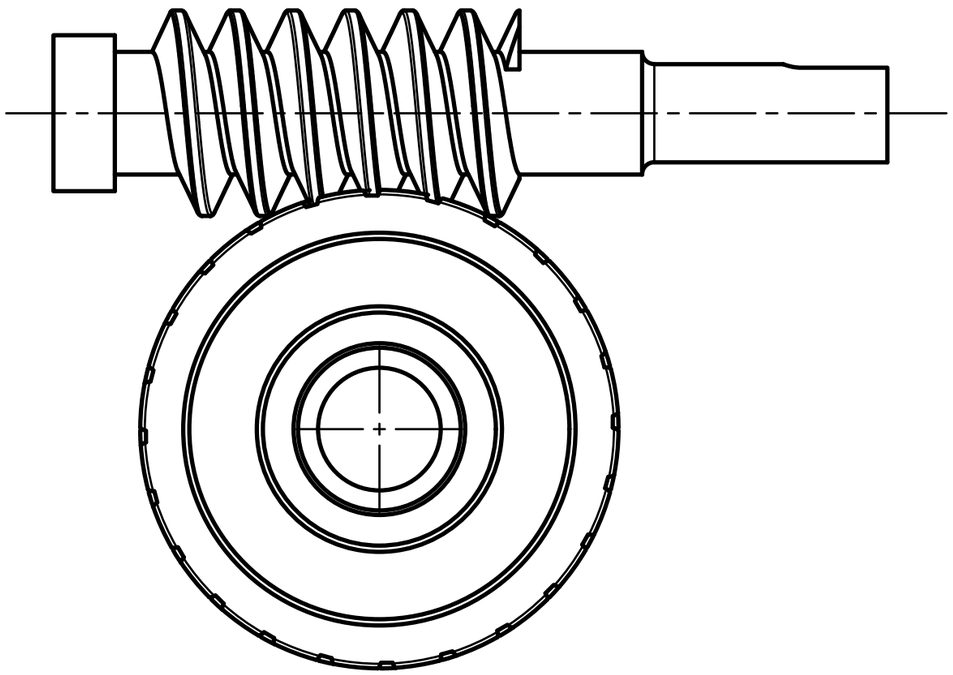

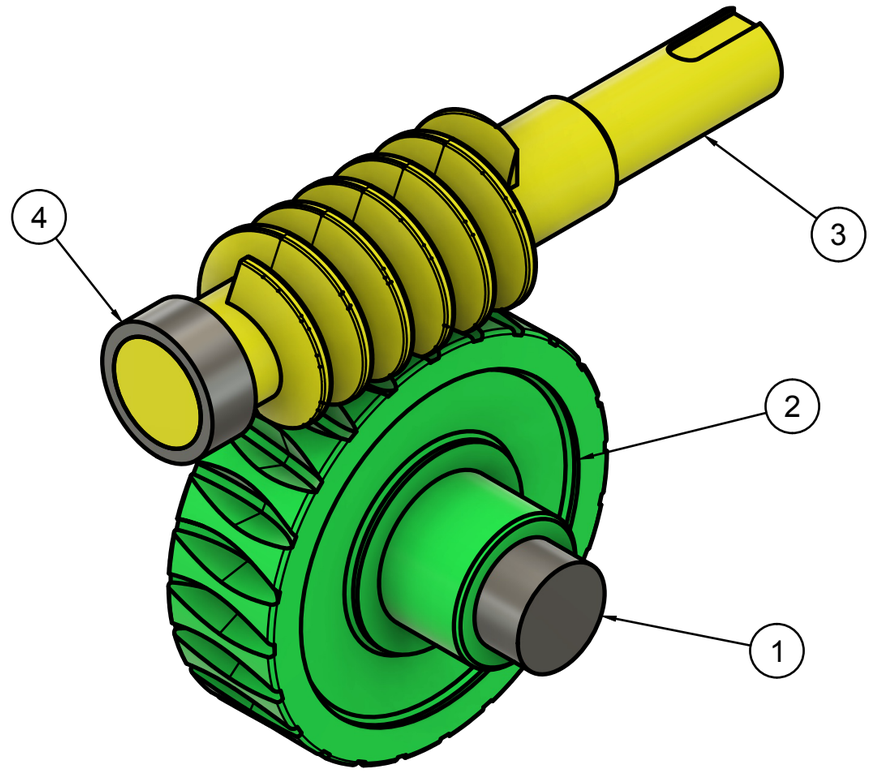

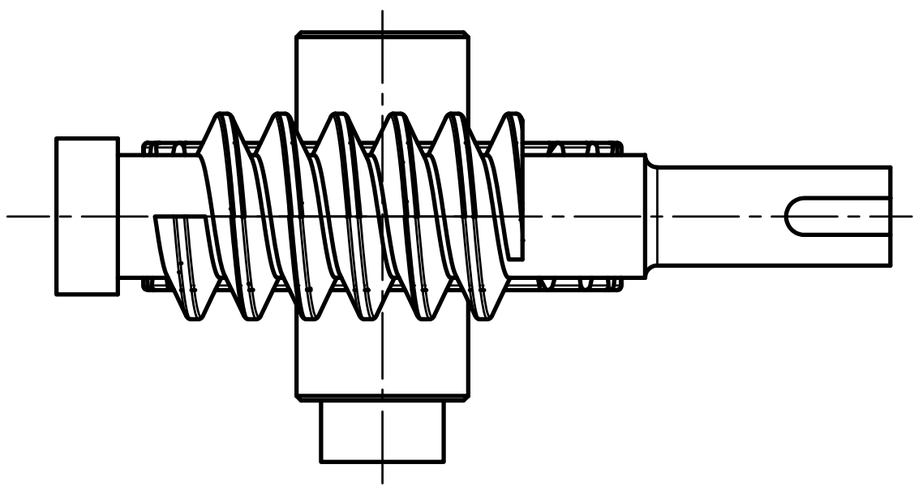

Item	Qty	Part Number	Material
4	1	Drivaxellagring	Steel
3	1	Worm drive shaft	Steel
2	1	Worm gear 24 teeth	Steel
1	1	Axel	Steel

Parts List

General Tolerances		
Weld constr. ISO 5817 Class C	Castings ISO 8062 CT12	Threads ISO 965 6H/6g
Linear and angular dimensions		
Machined with cutting tools (does not include sawing)	ISO 2768-1-m	
Machined with non cutting tools (includes sawing)	ISO 2768-1-v	
Broken edges and angular dimensions	ISO 2768-1-c	

School subject: CAD1/CAD2

Scale: 1:1

PERSTORP TEKNISKA GYMNASIUM

First angle projection

Created by: Jorgen Nilsson

Approved by:

Document type: FUSION 360 Drawing

Approved date:

Title: D14 - Snäckväxel

Assembly exercise

DWG No.: PG-24209

Rev.	Date of issue	Sheet
0	2024-08-13	1/1

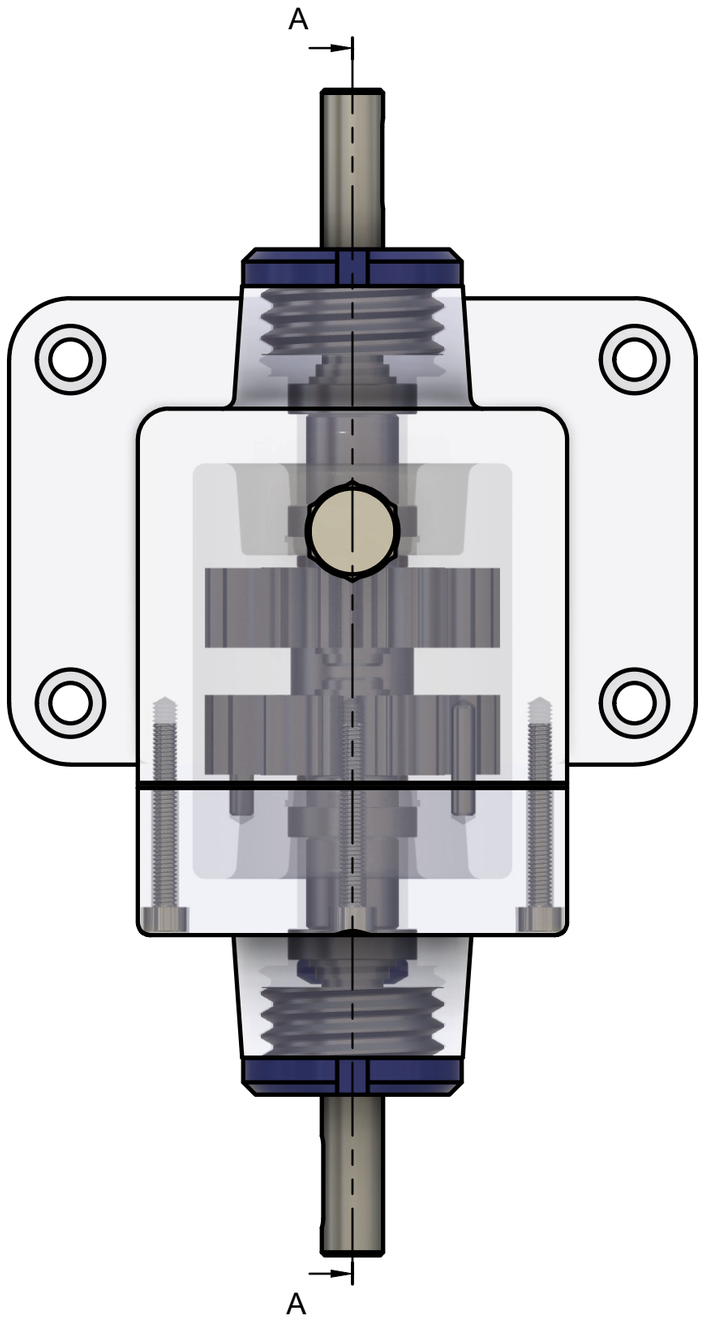

A-A

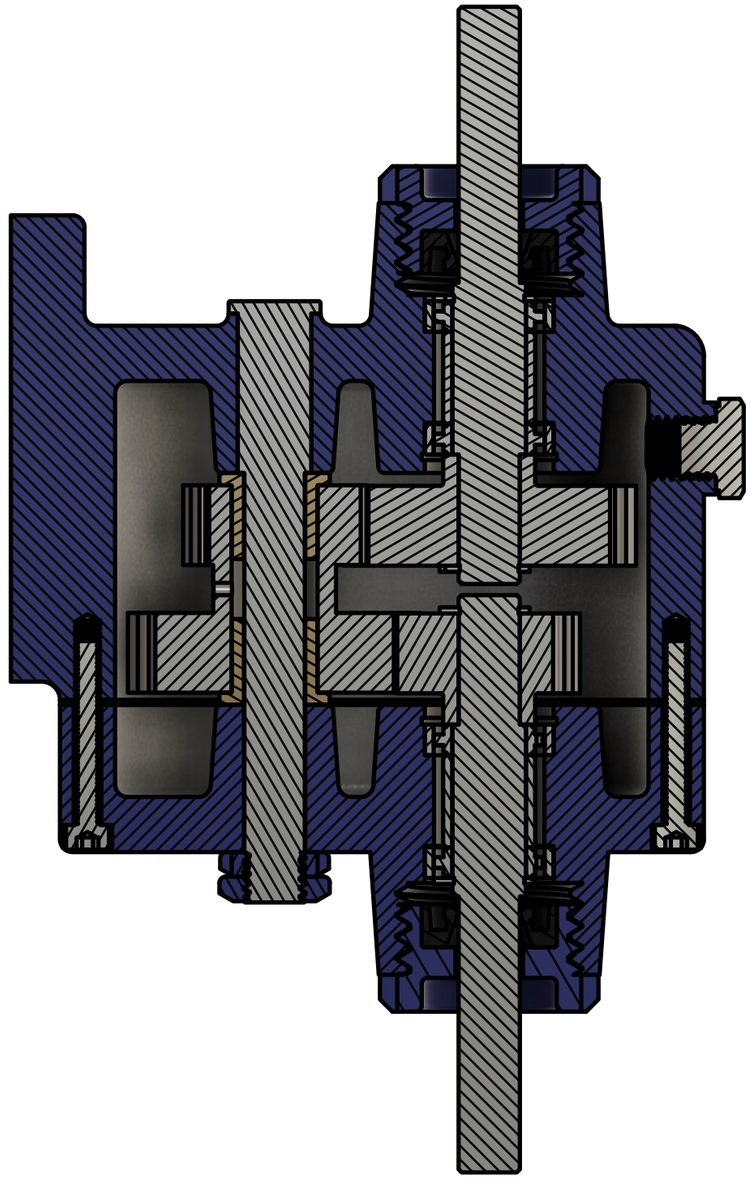

ISO

PERSTORP TEKNISKA GYMNASIUM

Dept. PG	Scale 1:1	Created by Jorgen Nilsson	Approved by
		Document type FUSION 360 Drawing	Approved date
		Title D15 - Gearbox Assembly exercise	DWG No. PG-24127
			Rev. 0 / Date of issue 2024-01-30 / Sheet 1/3

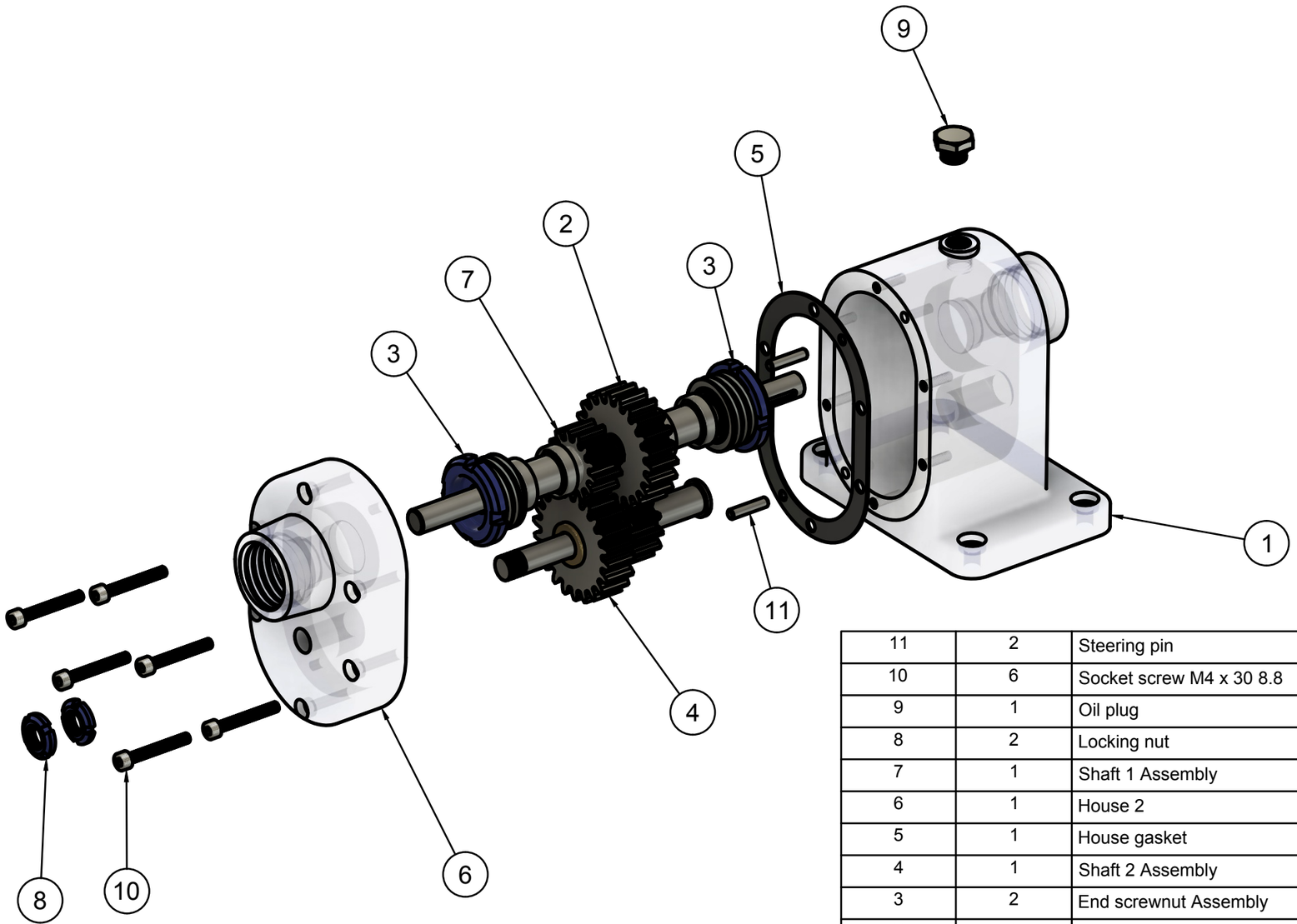

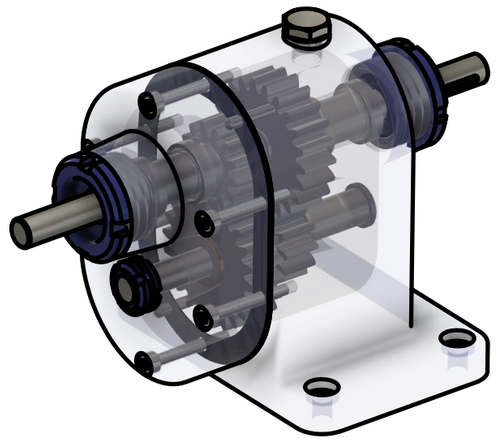

Item	Qty	Part Number	Material	Mass
11	2	Steering pin	Steel	1.8 g
10	6	Socket screw M4 x 30 8.8	Steel, Chrome Plated	3.3 g
9	1	Oil plug	Steel, Chrome Plated	9.0 g
8	2	Locking nut	Steel	4.6 g
7	1	Shaft 1 Assembly	Steel	134.4 g
6	1	House 2	Steel, Cast	877.0 g
5	1	House gasket	Rubber	1.6 g
4	1	Shaft 2 Assembly		269.7 g
3	2	End screwnut Assembly		58.4 g
2	1	Shaft 3 Assembly	Steel	234.3 g
1	1	House 1	Steel, Cast	2448.2 g

Parts List

Dept. PG	Scale 1:2	Created by Jorgen Nilsson	Approved by
PERSTORP TEKNISKA GYMNASIUM		Document type FUSION 360 Drawing	Approved date
		Title D15 - Gearbox Assembly exercise	DWG No. PG-24127
			Rev. 0 / Date of issue 2024-01-30 / Sheet 2/3

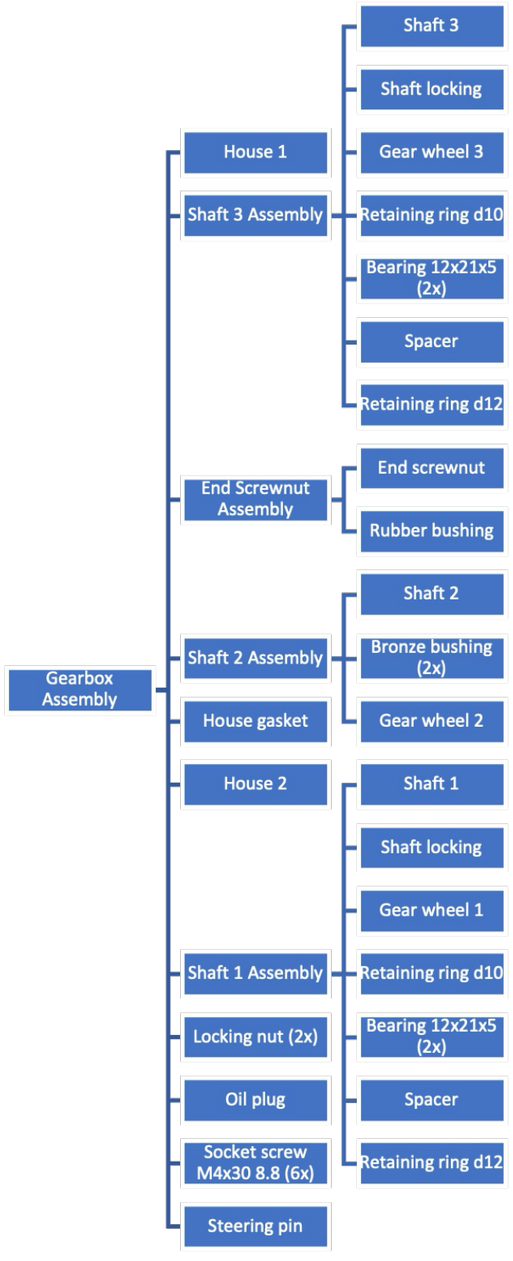

Dept. PG	Scale	Created by Jorgen Nilsson	Approved by
PERSTORP TEKNISKA GYMNASIUM		Document type FUSION 360 Drawing	Approved date
		Title D15 - Gearbox Assembly exercise	DWG No. PG-24127
		Rev. 0	Date of issue 2024-01-30 / Sheet 3/3