This drawing is Perstorp Tekniska Gymnasium property and is protected according to existing law and may not without our approval be copied, imparted anyone or used without authorization

Revision history			
Rev.	Description	Created by	Rev. date

- Dimensionstolerans
- Axeltolerans
- Cylindricitet

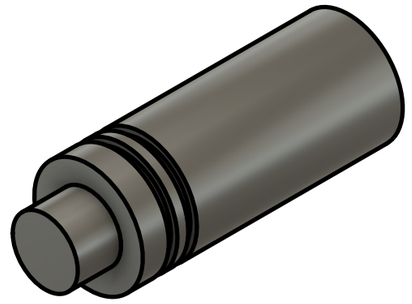

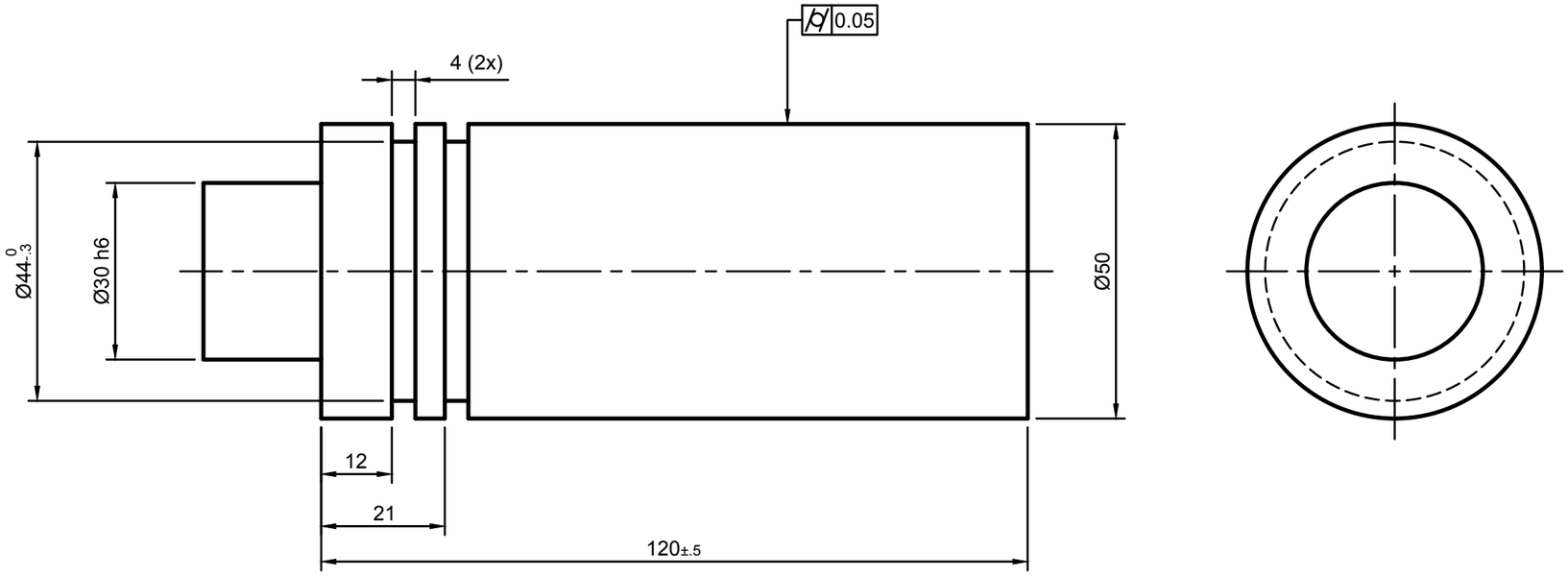

General Tolerances		
Weld constr. ISO 5817 Class C	Castings ISO 8062 CT12	Threads ISO 965 6H/6g
Linear and angular dimensions		
Machined with cutting tools (does not include sawing)		ISO 2768-1-m
Machined with non cutting tools (includes sawing)		ISO 2768-1-v
Broken edges and angular dimensions		ISO 2768-1-c

School subject: CAD1/CAD2	Scale: 1:1	Created by: Jorgen Nilsson	Approved by:
PERSTORP TEKNISKA GYMNASIUM		Document type: FUSION 360 Drawing	Approved date:
First angle projection		Title: C1 Drawing exercise	DWG No.: PG-24167
			Rev.: 0 / Date of issue: 2024-04-14 / Sheet: 1/1

- Dimensionstolerans
- Rundhetstolerans
- Planhetstolerans
- Lägeriktighet

Revision history			
Rev.	Description	Created by	Rev. date

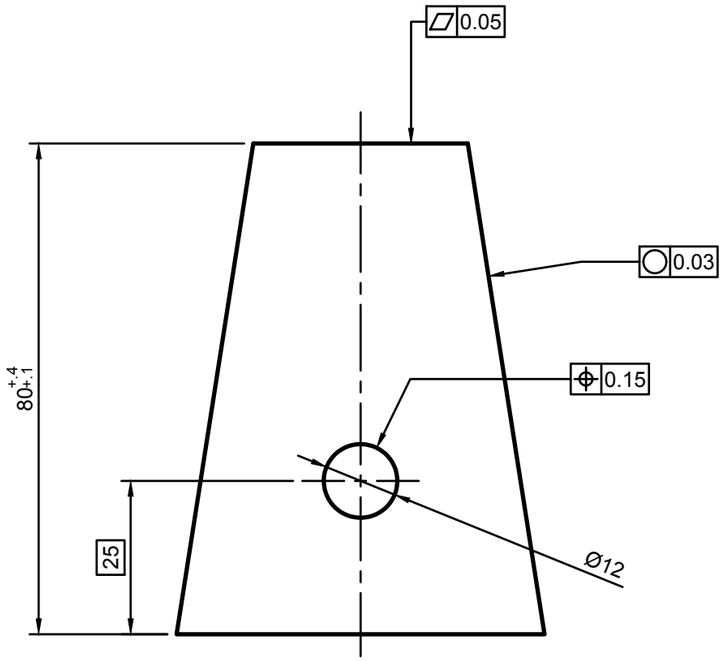

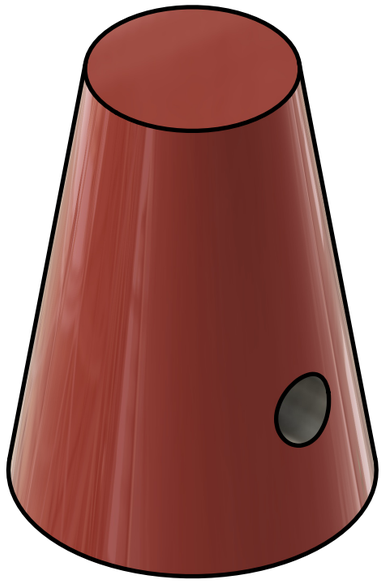

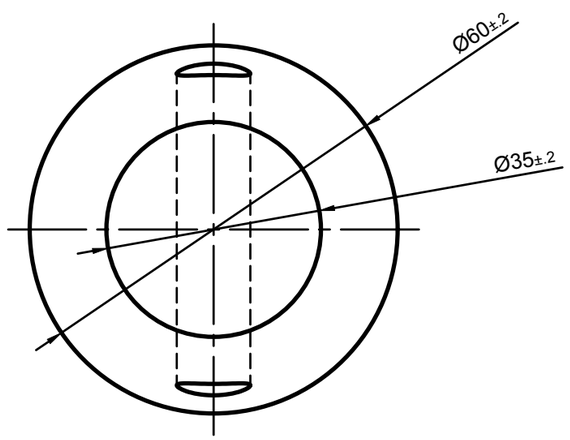

This drawing is Perstorp Tekniska Gymnasium property and is protected according to existing law and may not without our approval be copied, imparted anyone or used without authorization

General Tolerances		
Weld constr. ISO 5817 Class C	Castings ISO 8062 CT12	Threads ISO 965 6H/6g
Linear and angular dimensions		
Machined with cutting tools (does not include sawing)		ISO 2768-1-m
Machined with non cutting tools (includes sawing)		ISO 2768-1-v
Broken edges and angular dimensions		ISO 2768-1-c

School subject: CAD1/CAD2	Scale: 1:1	Created by: Jorgen Nilsson	Approved by:
PERSTORP TEKNISKA GYMNASIUM		Document type: FUSION 360 Drawing	Approved date:
First angle projection		Title: C2 Drawing exercise	DWG No.: PG-24168
			Rev.: 0 / Date of issue: 2024-04-14 / Sheet: 1/1

- Dimensionstolerans
- Håltolerans
- Planhet
- Parallellitet

Revision history			
Rev.	Description	Created by	Rev. date

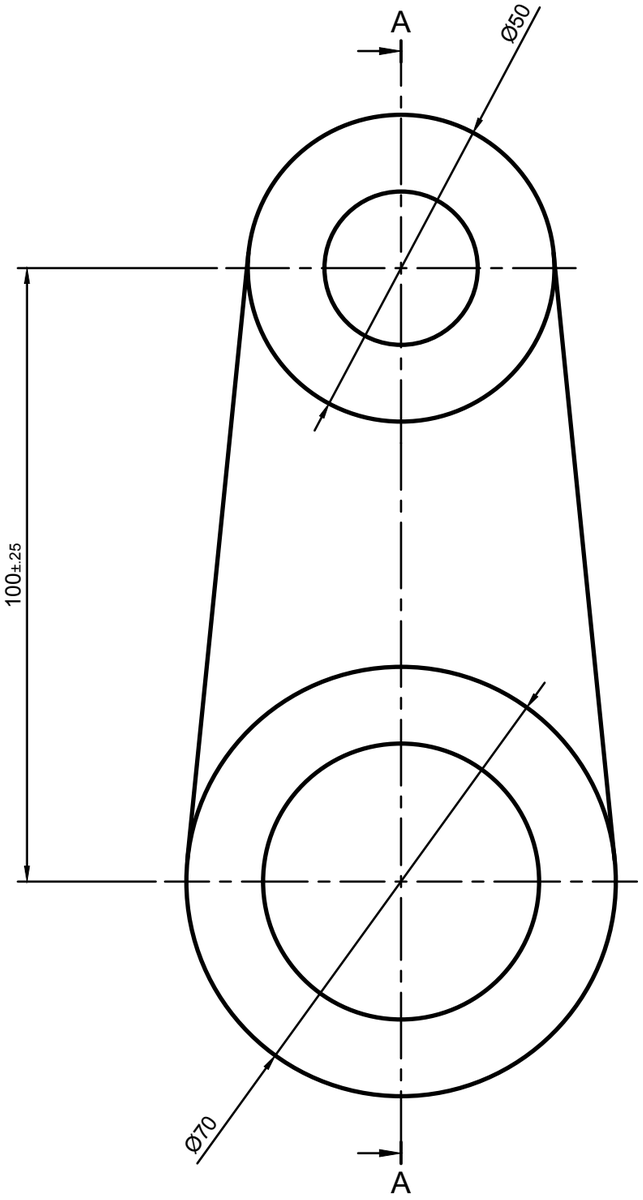

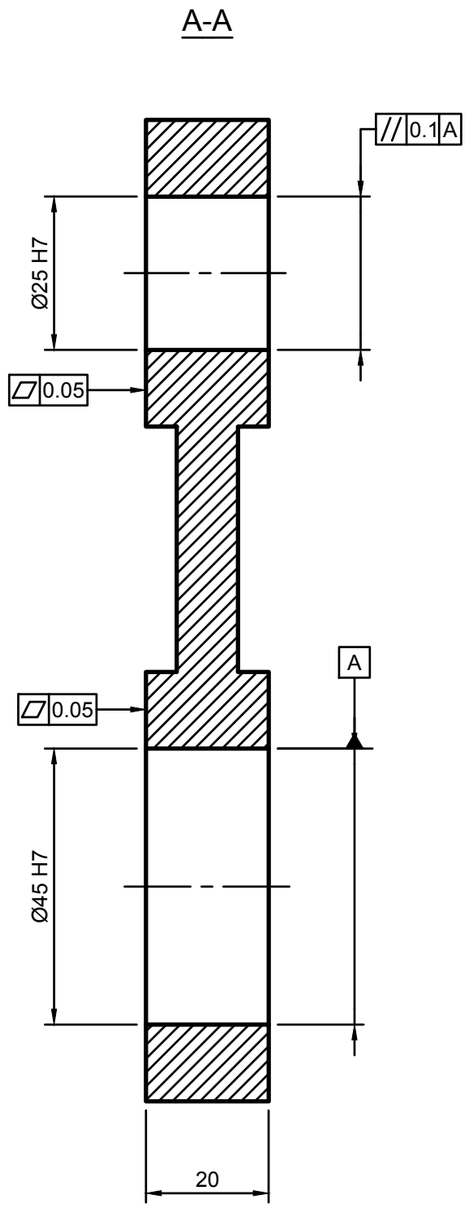

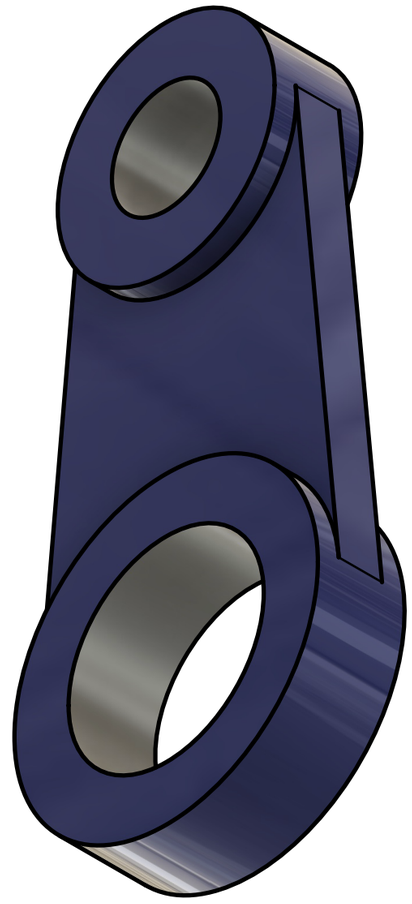

This drawing is Perstorp Tekniska Gymnasium property and is protected according to existing law and may not without our approval be copied, imparted anyone or use

General Tolerances		
Weld constr. ISO 5817 Class C	Castings ISO 8062 CT12	Threads ISO 965 6H/6g
Linear and angular dimensions		
Machined with cutting tools (does not include sawing)	ISO 2768-1-m	
Machined with non cutting tools (includes sawing)	ISO 2768-1-v	
Broken edges and angular dimensions	ISO 2768-1-c	

School subject: CAD1/CAD2	Scale: 1:1	Created by: Jorgen Nilsson	Approved by:
PERSTORP TEKNISKA GYMNASIUM		Document type: FUSION 360 Drawing	Approved date:
First angle projection		Title: C3 Drawing exercise	DWG No.: PG-24169
			Rev.: 0 / Date of issue: 2024-04-14 / Sheet: 1/1

- Dimensionstolerans
- Ytfinhet
- Vinkelräthet
- Vinkelriktighet
- Lägeriktighet

Revision history			
Rev.	Description	Created by	Rev. date

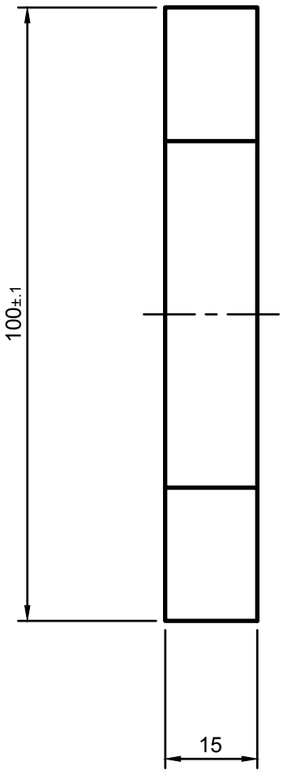

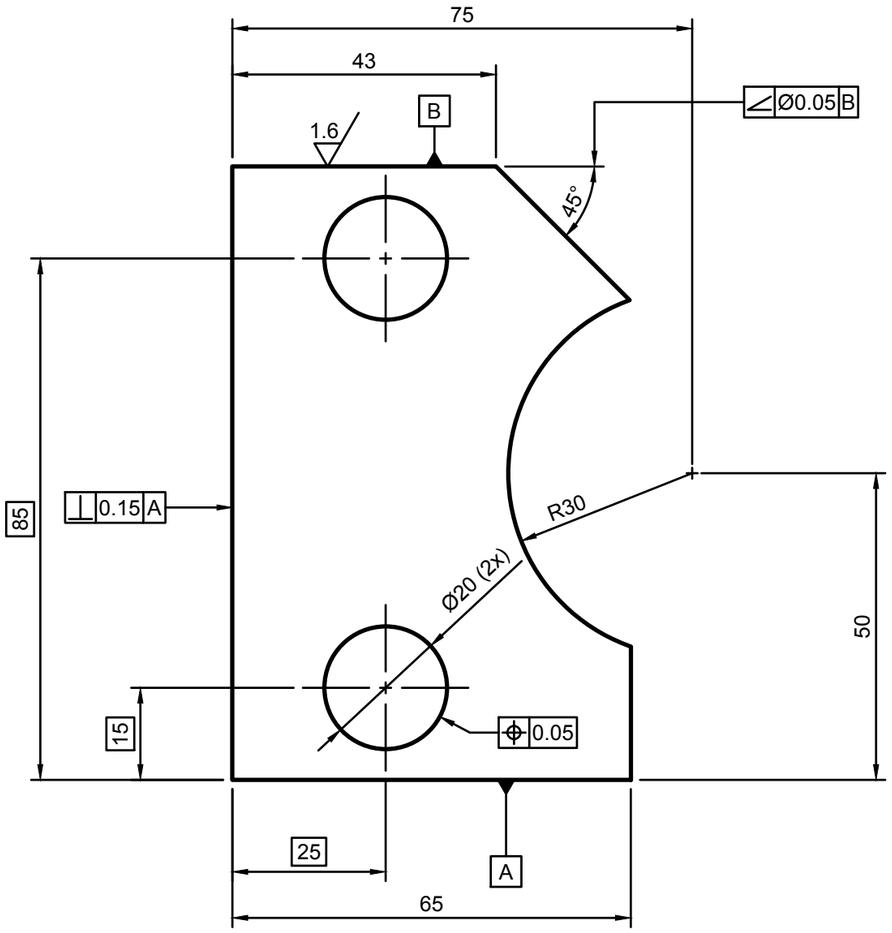

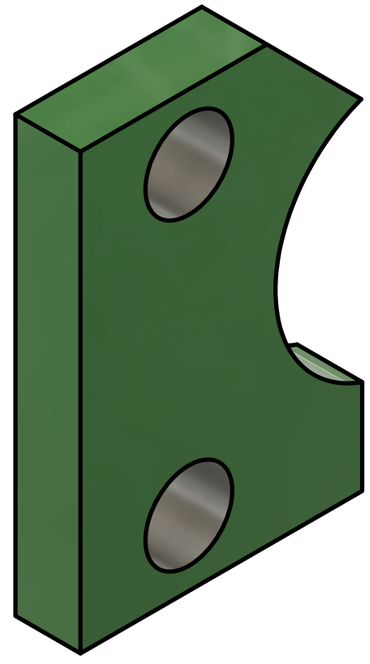

This drawing is Perstorp Tekniska Gymnasium property and is protected according to existing law and may not without our approval be copied, imparted anyone or used without authorization

General Tolerances		
Weld constr. ISO 5817 Class C	Castings ISO 8062 CT12	Threads ISO 965 6H/6g
Linear and angular dimensions		
Machined with cutting tools (does not include sawing)		ISO 2768-1-m
Machined with non cutting tools (includes sawing)		ISO 2768-1-v
Broken edges and angular dimensions		ISO 2768-1-c

School subject: CAD1/CAD2	Scale: 1:1	Created by: Jorgen Nilsson	Approved by:
PERSTORP TEKNISKA GYMNASIUM		Document type: FUSION 360 Drawing	Approved date:
First angle projection		Title: C4 Drawing exercise	DWG No.: PG-24170
			Rev.: 0 / Date of issue: 2024-04-15 / Sheet: 1/1

- Dimensionstolerans
- Ytfinhet
- Symmetri
- Lägeriktighet

Revision history			
Rev.	Description	Created by	Rev. date

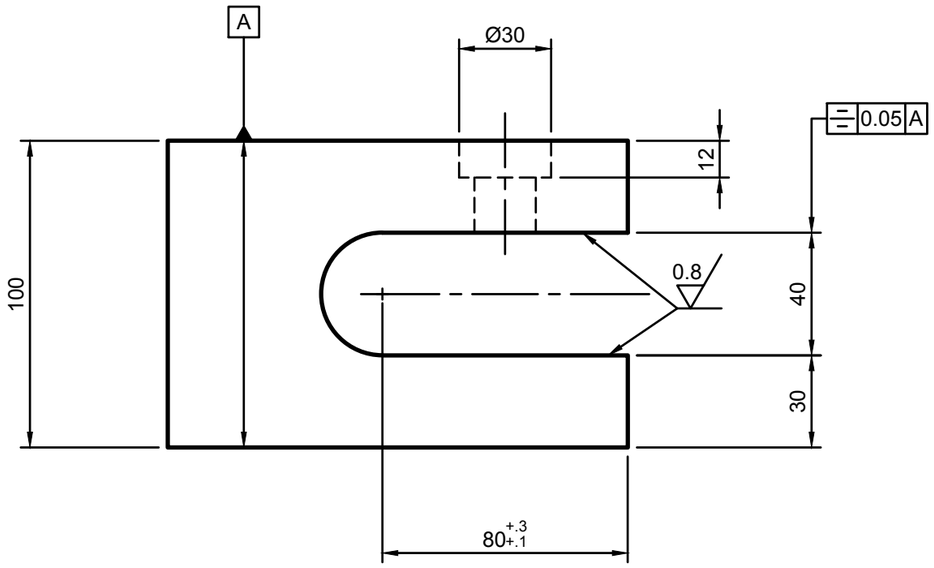

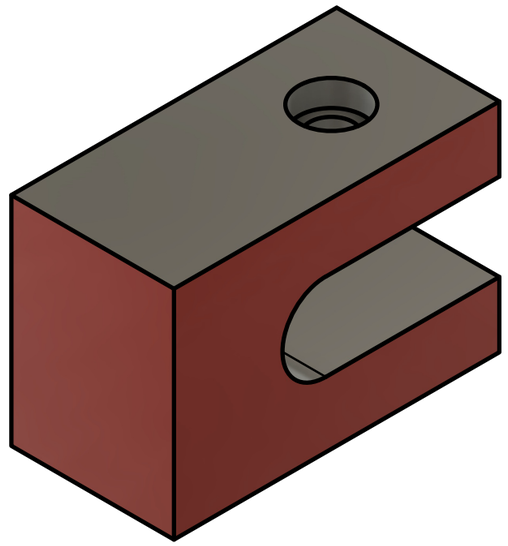

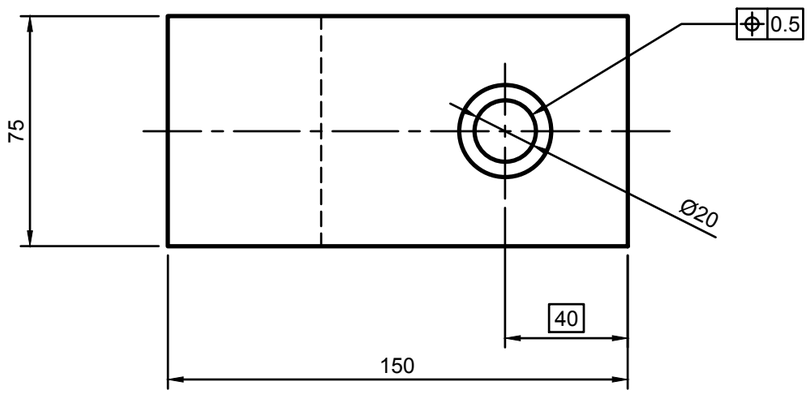

This drawing is Perstorp Tekniska Gymnasium property and is protected according to existing law and may not without our approval be copied, imparted anyone or used without authorization

General Tolerances		
Weld constr. ISO 5817 Class C	Castings ISO 8062 CT12	Threads ISO 965 6H/6g
Linear and angular dimensions		
Machined with cutting tools (does not include sawing)		ISO 2768-1-m
Machined with non cutting tools (includes sawing)		ISO 2768-1-v
Broken edges and angular dimensions		ISO 2768-1-c

School subject: CAD1/CAD2	Scale: 1:2	Created by: Jorgen Nilsson	Approved by:
PERSTORP TEKNISKA GYMNASIUM		Document type: FUSION 360 Drawing	Approved date:
First angle projection		Title: C5 Drawing exercise	DWG No.: PG-24171
			Rev.: 0 / Date of issue: 2024-04-15 / Sheet: 1/1

- Dimensionstolerans
- Ytfinhet
- Symmetri
- Totalkast

Revision history			
Rev.	Description	Created by	Rev. date

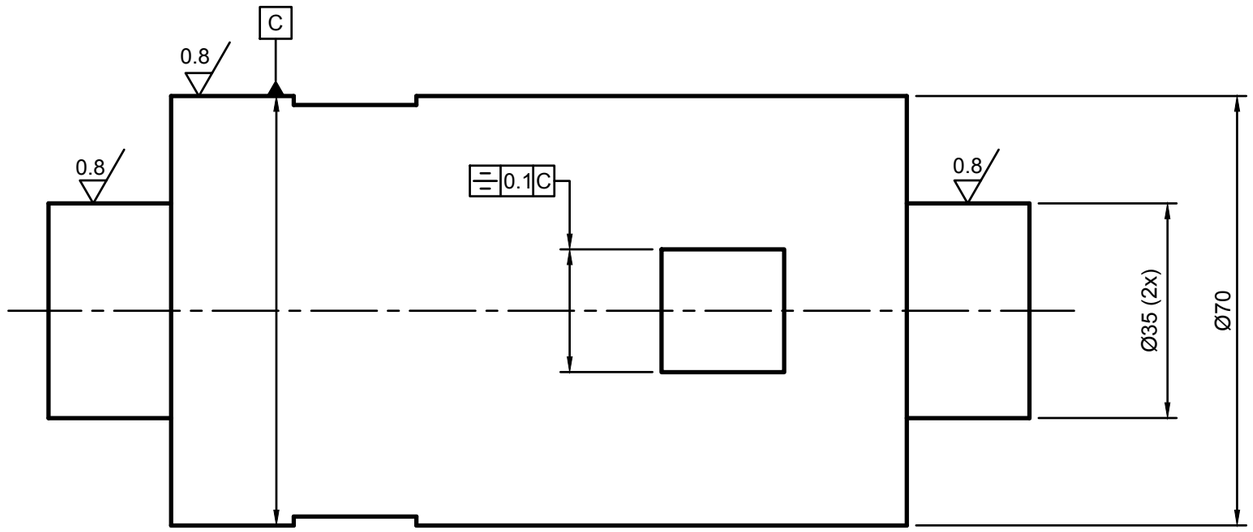

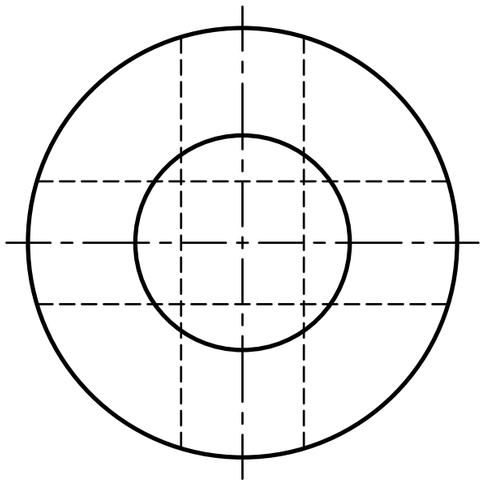

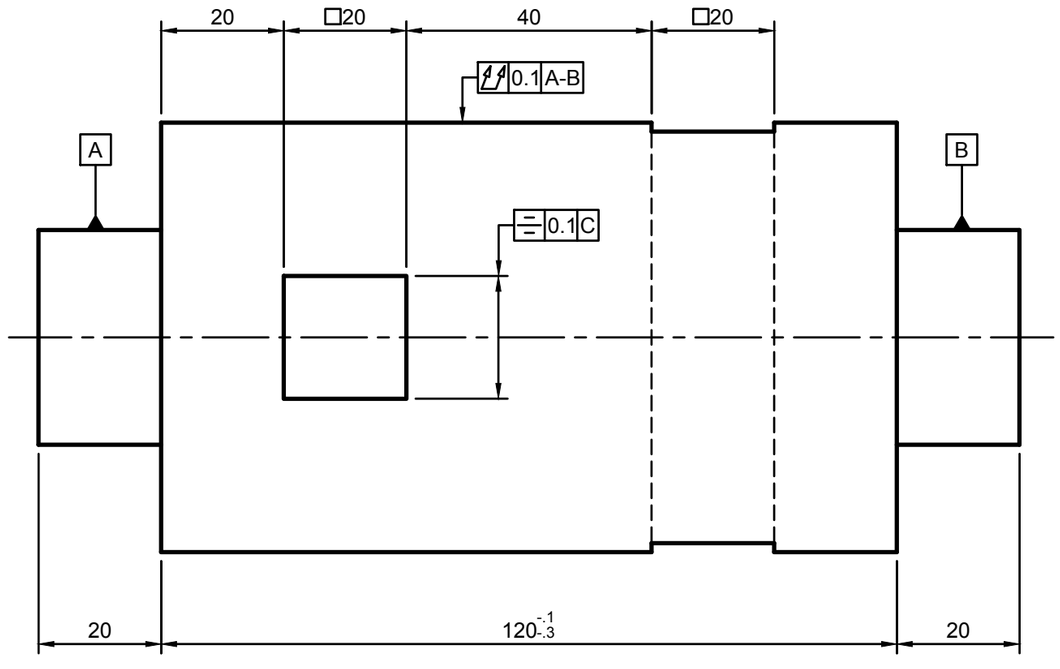

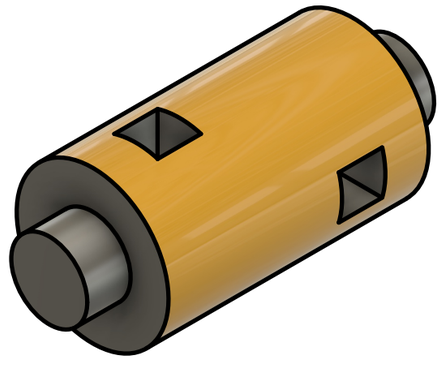

This drawing is Perstorp Tekniska Gymnasium property and is protected according to existing law and may not without our approval be copied, imparted anyone or used without authorization

General Tolerances		
Weld constr. ISO 5817 Class C	Castings ISO 8062 CT12	Threads ISO 965 6H/6g
Linear and angular dimensions		
Machined with cutting tools (does not include sawing)	ISO 2768-1-m	
Machined with non cutting tools (includes sawing)	ISO 2768-1-v	
Broken edges and angular dimensions	ISO 2768-1-c	

School subject: CAD1/CAD2	Scale: 1:1	Created by: Jorgen Nilsson	Approved by:
PERSTORP TEKNISKA GYMNASIUM		Document type: FUSION 360 Drawing	Approved date:
First angle projection		Title: C6 Drawing exercise	DWG No.: PG-24172
			Rev.: 0 / Date of issue: 2024-04-16 / Sheet: 1/1

- Svetssymboler
- Vinkelräthet
- Materiallista
- Positionsballonger

Revision history			
Rev.	Description	Created by	Rev. date

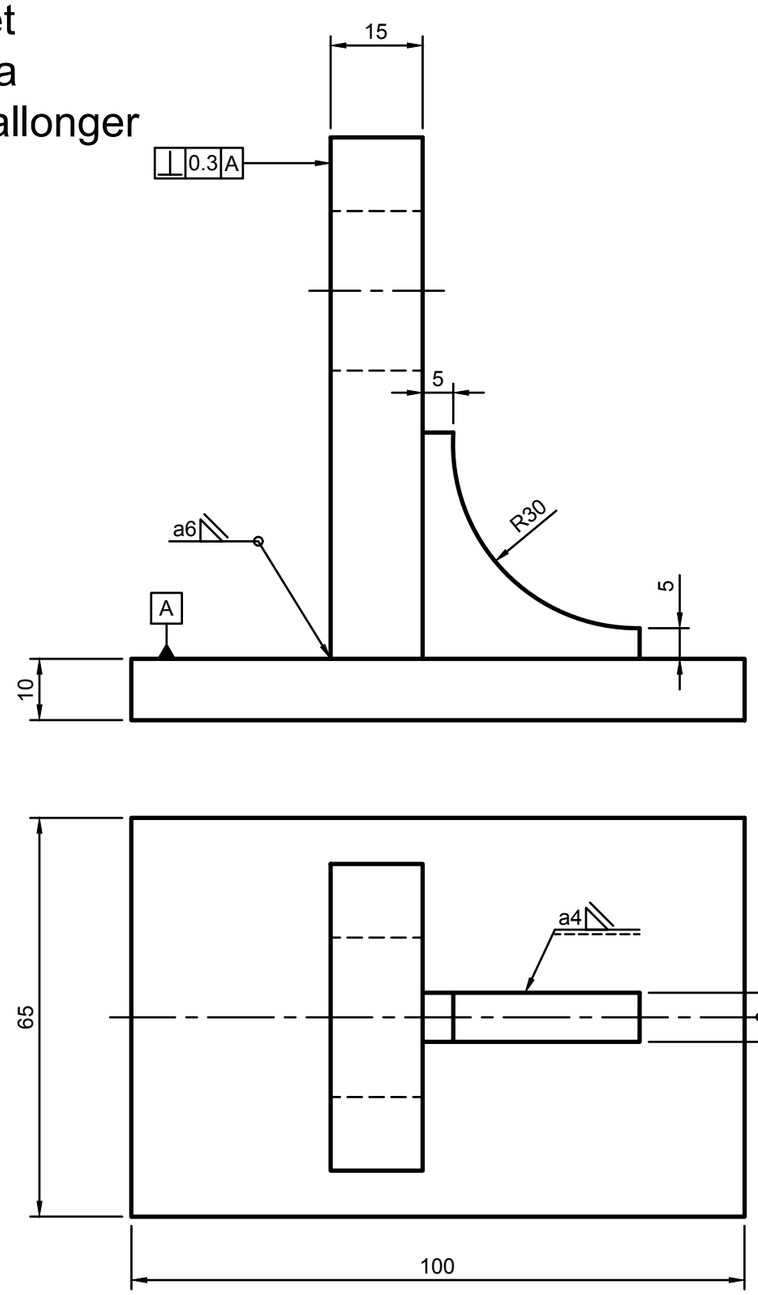

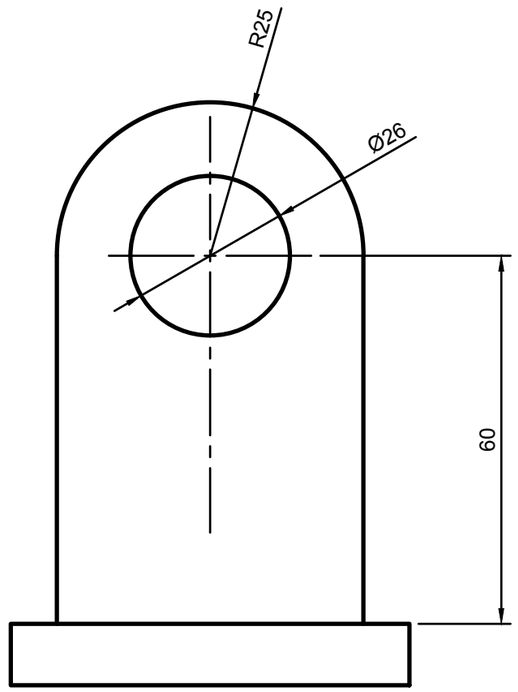

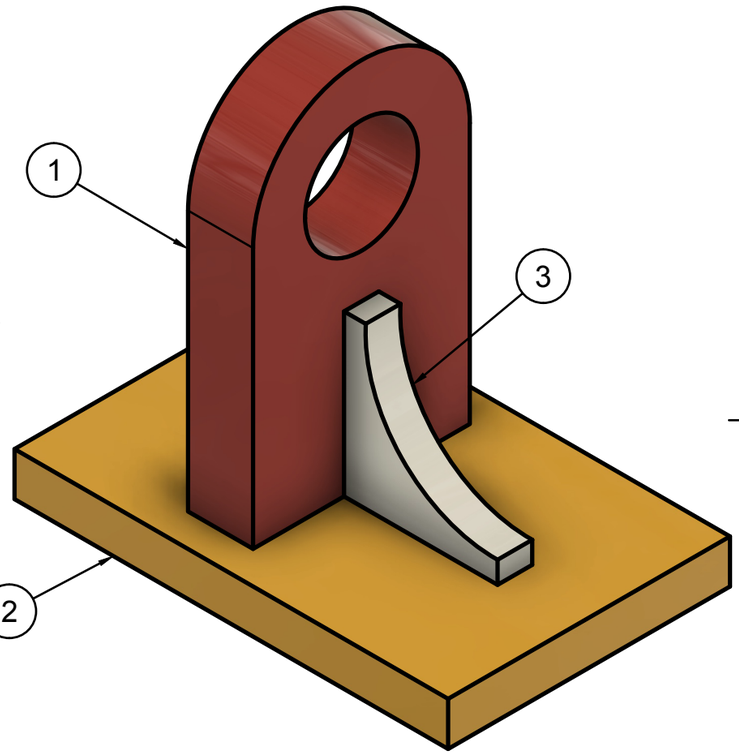

Item	Qty	Part Number	Material	Mass
3	1	Plate 8mm	S355J2G3	0.03 kg
2	1	Plate 10mm	S355J2G3	0.51 kg
1	1	Plate 15mm	S355J2G3	0.41 kg

Parts List

General Tolerances		
Weld constr. ISO 5817 Class C	Castings ISO 8062 CT12	Threads ISO 965 6H/6g
Linear and angular dimensions		
Machined with cutting tools (does not include sawing)	ISO 2768-1-m	
Machined with non cutting tools (includes sawing)	ISO 2768-1-v	
Broken edges and angular dimensions	ISO 2768-1-c	

School subject: CAD1/CAD2

Scale: 1:1

PERSTORP TEKNISKA GYMNASIUM

First angle projection

Created by: Jorgen Nilsson

Document type: FUSION 360 Drawing

Title: C7 Drawing exercise

Approved by:

Approved date:

DWG No.: PG-24173

Rev.: 0

Date of issue: 2024-04-16

Sheet: 1/1

This drawing is Perstorp Tekniska Gymnasium property and is protected according to existing law and may not without our approval be copied, imparted anyone or use

- Skruvgängor
- Ytfinhet
- Materiallista
- Positionsballonger

Revision history			
Rev.	Description	Created by	Rev. date

A-A

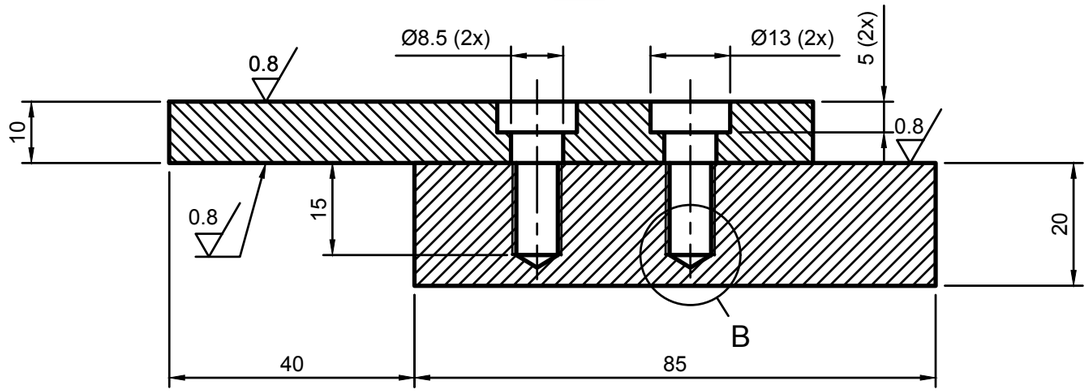

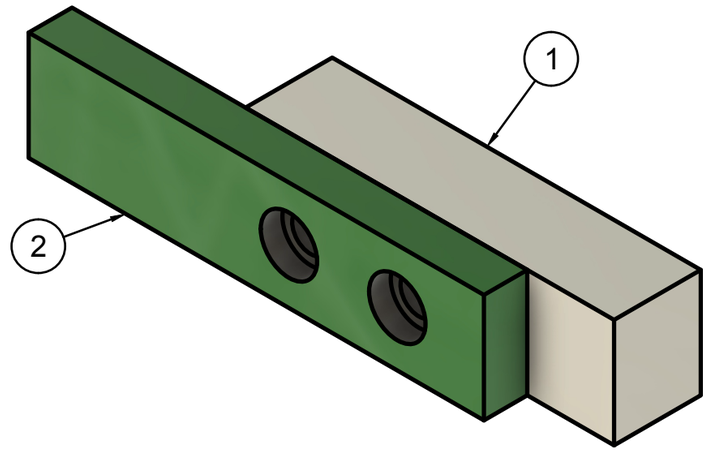

B (2:1)

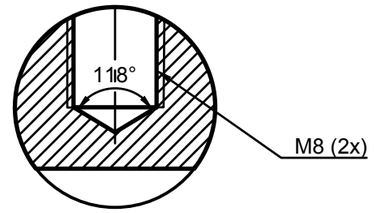

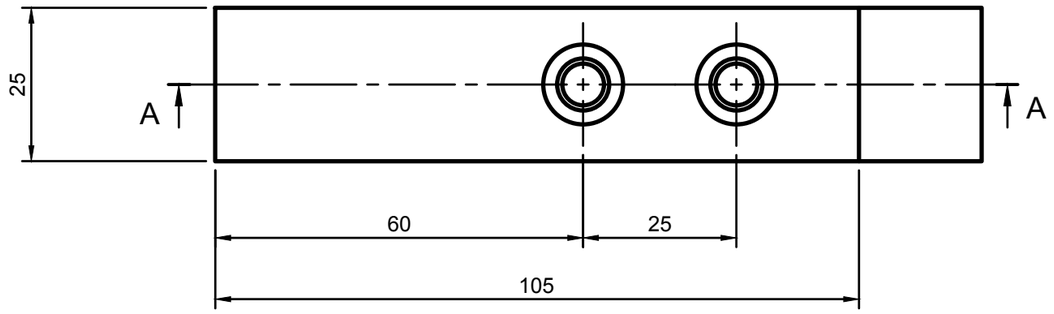

Item	Qty	Part Number	Material	Mass
2	1	Plate 10	S255J2G3	0.19 kg
1	1	Plate 20	S255J2G3	0.32 kg

Parts List

General Tolerances		
Weld constr. ISO 5817 Class C	Castings ISO 8062 CT12	Threads ISO 965 6H/6g
Linear and angular dimensions		
Machined with cutting tools (does not include sawing)	ISO 2768-1-m	
Machined with non cutting tools (includes sawing)	ISO 2768-1-v	
Broken edges and angular dimensions	ISO 2768-1-c	

School subject: CAD1/CAD2	Scale: 1:1	Created by: Jorgen Nilsson	Approved by:
PERSTORP TEKNISKA GYMNASIUM		Document type: FUSION 360 Drawing	Approved date:
First angle projection		Title: C8 Drawing exercise	DWG No.: PG-24175
			Rev.: 0 / Date of issue: 2024-04-18 / Sheet: 1/1

This drawing is Perstorp Tekniska Gymnasium property and is protected according to existing law and may not without our approval be copied, imparted anyone or used without authorization

- Kedjemåttsättning
- Positionsmåttsättning
- Dimensionstolerans
- Ritningssketch

Revision history			
Rev.	Description	Created by	Rev. date

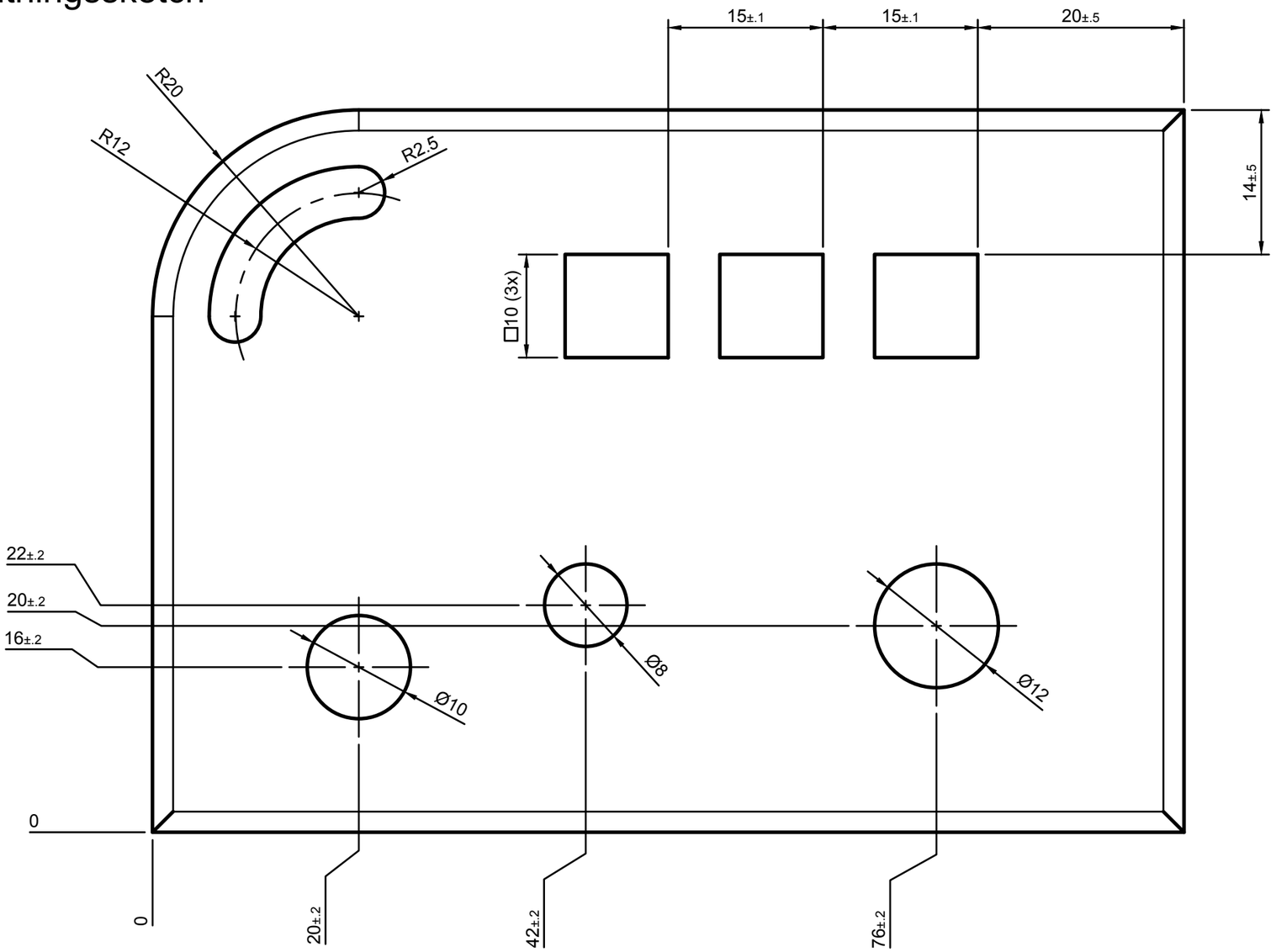

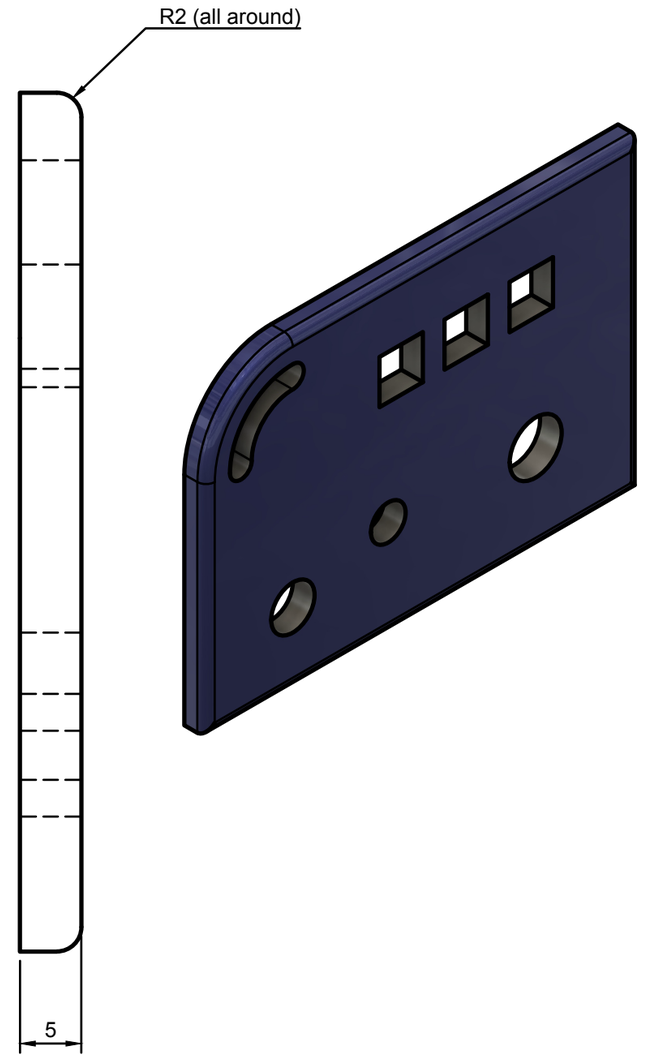

This drawing is Perstorp Tekniska Gymnasium property and is protected according to existing law and may not without our approval be copied, imparted anyone or used without authorization

General Tolerances		
Weld constr. ISO 5817 Class C	Castings ISO 8062 CT12	Threads ISO 965 6H/6g
Linear and angular dimensions		
Machined with cutting tools (does not include sawing)	ISO 2768-1-m	
Machined with non cutting tools (includes sawing)	ISO 2768-1-v	
Broken edges and angular dimensions	ISO 2768-1-c	

School subject: CAD1/CAD2	Scale: 2:1	Created by: Jorgen Nilsson	Approved by:
PERSTORP TEKNISKA GYMNASIUM		Document type: FUSION 360 Drawing	Approved date:
First angle projection		Title: C9 Drawing exercise	DWG No.: PG-24191
			Rev.: 0 / Date of issue: 2024-04-28 / Sheet: 1/1

- Textfont
- Ytfinhet

Revision history			
Rev.	Description	Created by	Rev. date

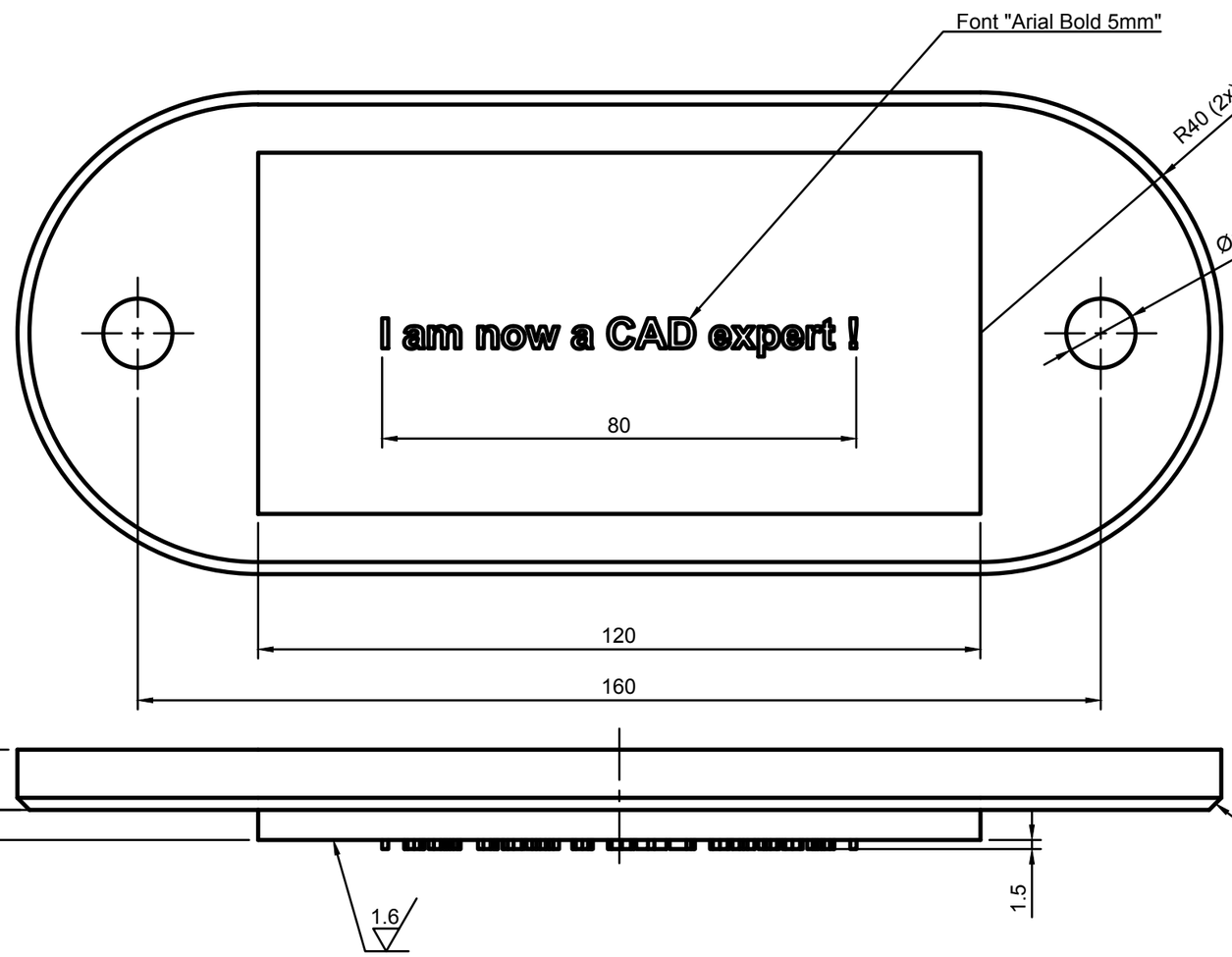

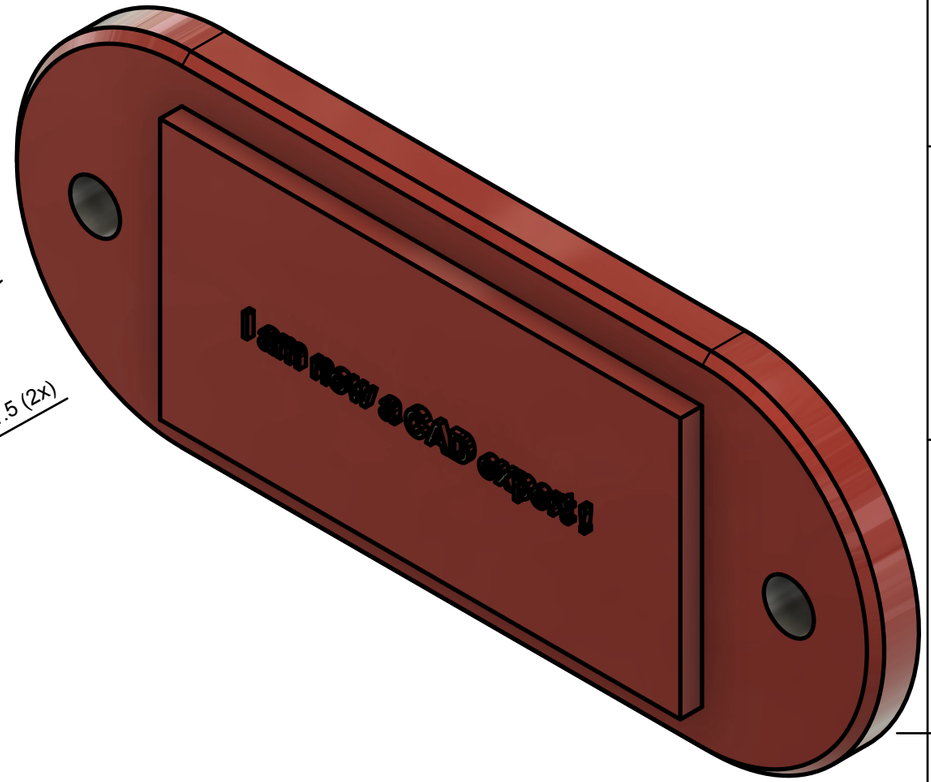

This drawing is Perstorp Tekniska Gymnasium property and is protected according to existing law and may not without our approval be copied, imparted anyone or used without authorization

Item	Qty	Part Number	Material	Mass
1	1	C10	Plastic PLA	0.23 kg

Parts List

General Tolerances		
Weld constr. ISO 5817 Class C	Castings ISO 8062 CT12	Threads ISO 965 6H/6g
Linear and angular dimensions		
Machined with cutting tools (does not include sawing)	ISO 2768-1-m	
Machined with non cutting tools (includes sawing)	ISO 2768-1-v	
Broken edges and angular dimensions	ISO 2768-1-c	

School subject: CAD1/CAD2	Scale: 1:1	Created by: Jorgen Nilsson	Approved by:
PERSTORP TEKNISKA GYMNASIUM		Document type: FUSION 360 Drawing	Approved date:
First angle projection		Title: C10 Drawing exercise	DWG No.: PG-24192
			Rev.: 0 / Date of issue: 2024-04-30 / Sheet: 1/1