This drawing is Perstorp Tekniska Gymnasium property and is protected according to existing law and may not without our approval be copied, imparted anyone or used without authorization

Revision history			
Rev.	Description	Created by	Rev. date

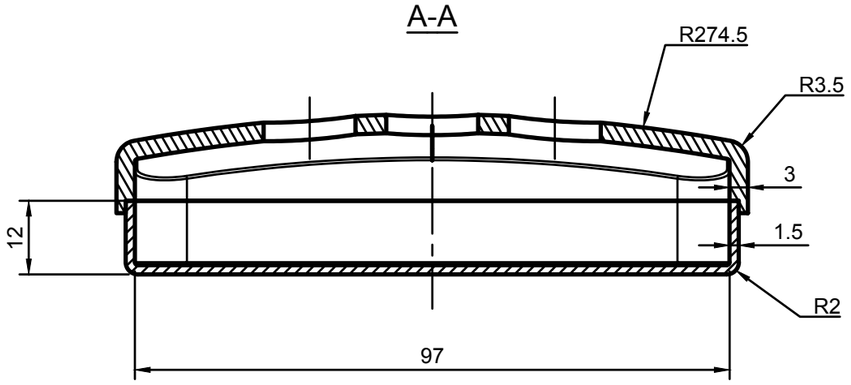

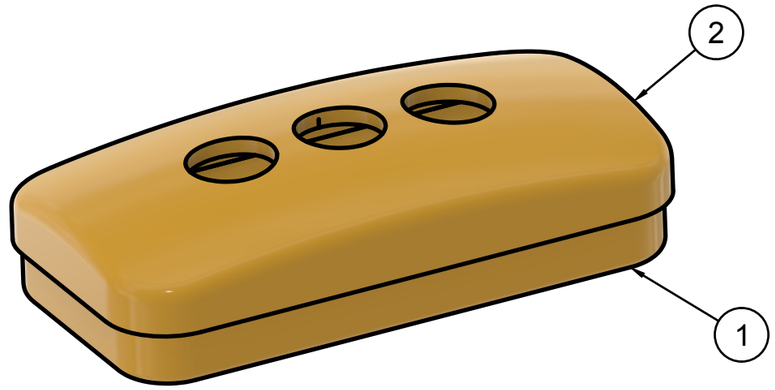

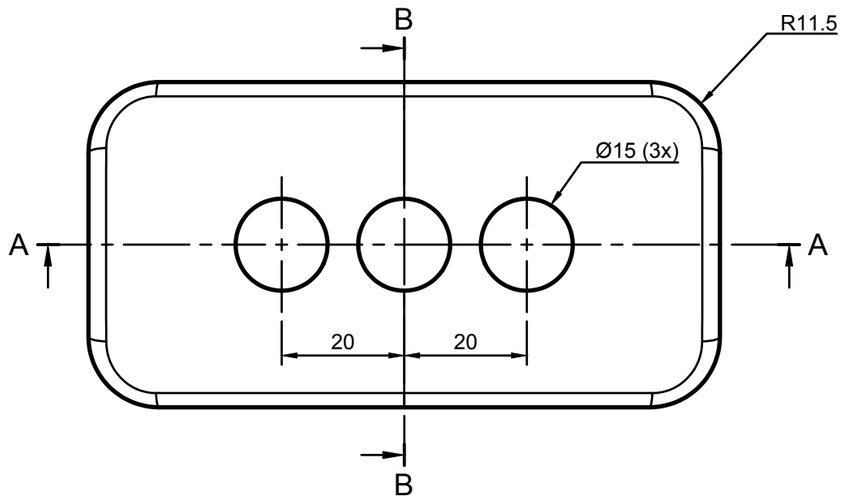

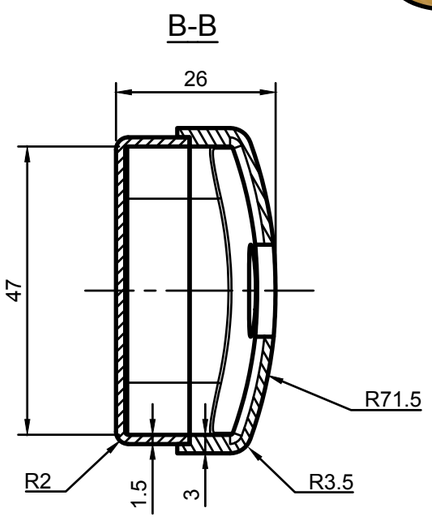

Item	Qty	Part Number	Material
2	1	Top part	ABS Plastic
1	1	Bottom part	ABS Plastic

Parts List

General Tolerances		
Weld constr. ISO 5817 Class C	Castings ISO 8062 CT12	Threads ISO 965 6H/6g
Linear and angular dimensions		
Machined with cutting tools (does not include sawing)	ISO 2768-1-m	
Machined with non cutting tools (includes sawing)	ISO 2768-1-v	
Broken edges and angular dimensions	ISO 2768-1-c	

School subject: CAD1/CAD2

Scale: 1:1

PERSTORP TEKNISKA GYMNASIUM

First angle projection

Created by: Jorgen Nilsson

Document type: FUSION 360 Drawing

Title: E4 - Tvålkopp

Surface modeling exercise

Approved by:

Approved date:

DWG No.: PG-24203

Rev.	Date of issue	Sheet
0	2024-09-07	1/1