This drawing is Perstorp Tekniska Gymnasium property and is protected according to existing law and may not without our approval be copied, imparted anyone or used without authorization

| Revision history | | | |
|---|---|---|---|
| Rev. | Description | Created by | Rev. date |
| | | | |

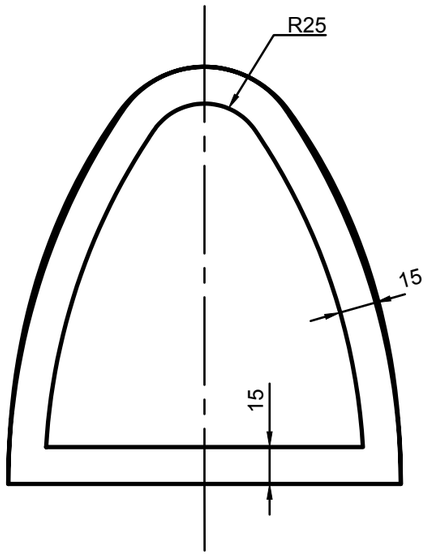


A (1:2)

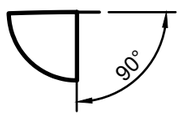


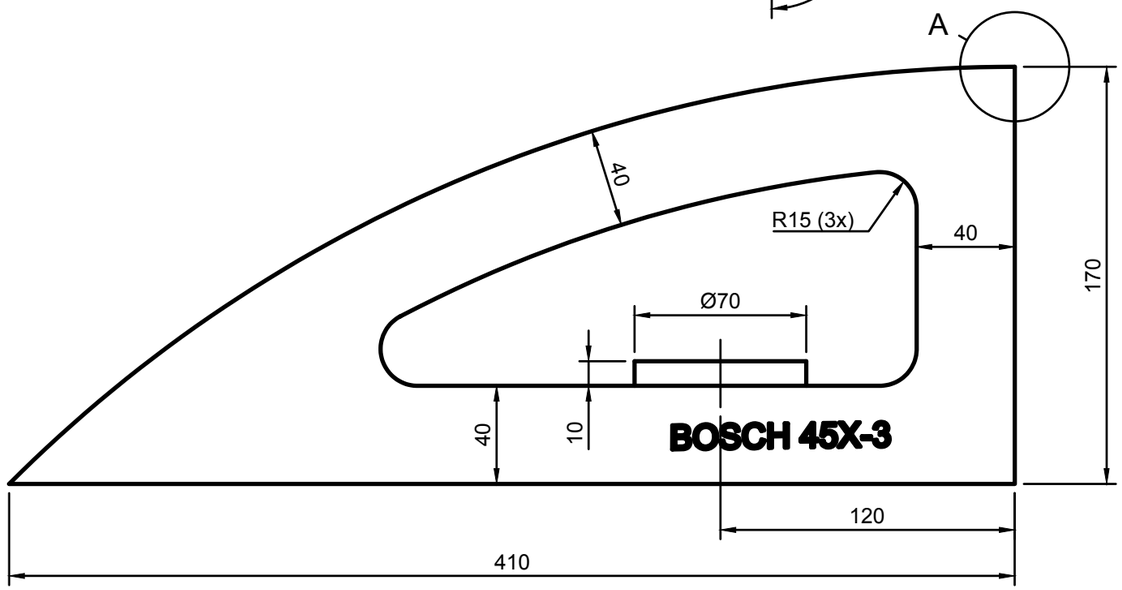


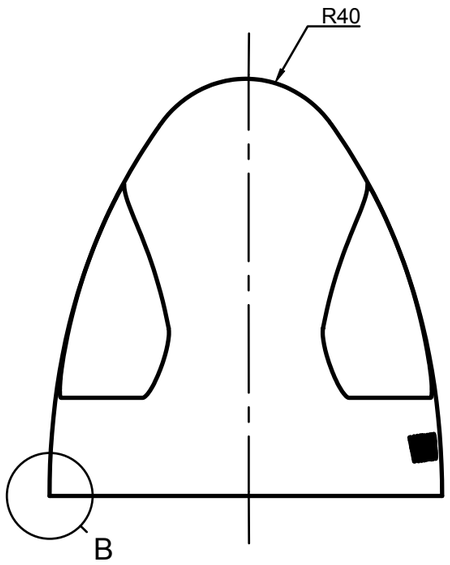


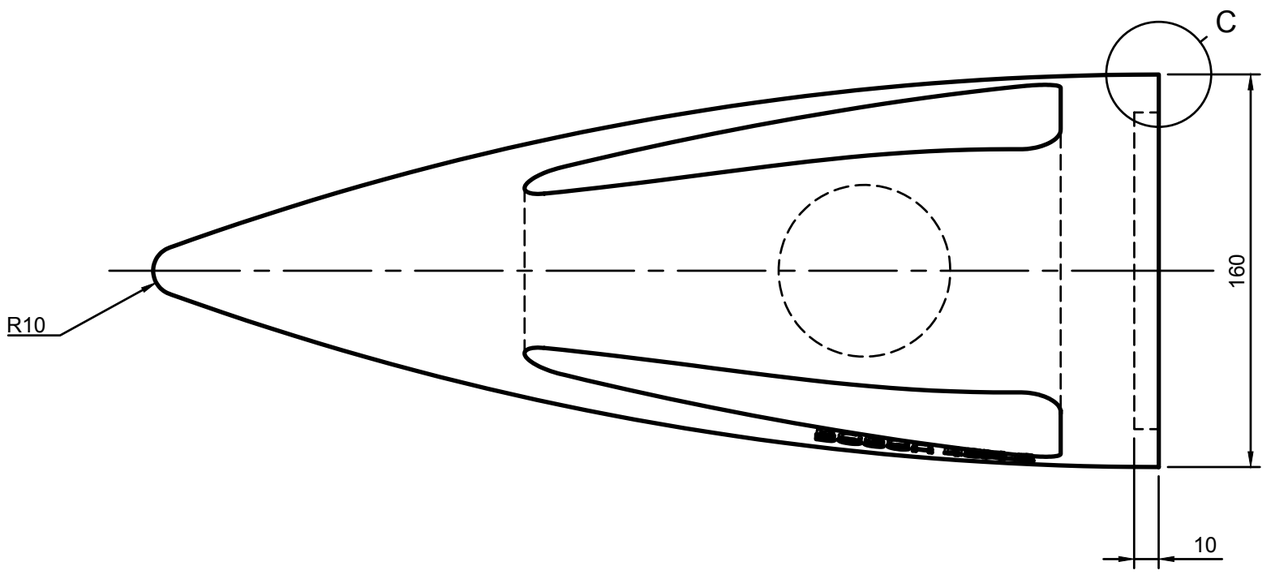


C (1:2)

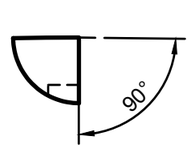


B (1:2)

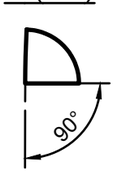


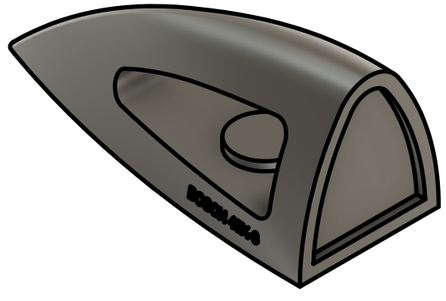

| General Tolerances | | |
|---|---|---|
| Weld constr. ISO 5817 Class C | Castings ISO 8062 CT12 | Threads ISO 965 6H/6g |
| Linear and angular dimensions | | |
| Machined with cutting tools (does not include sawing) | ISO 2768-1-m | |
| Machined with non cutting tools (includes sawing) | ISO 2768-1-v | |
| Broken edges and angular dimensions | ISO 2768-1-c | |

| | | | |
|---|---|---|---|
| School subject: CAD1/CAD2 | Scale: 1:2.5 | Created by: Jorgen Nilsson | Approved by: |
| PERSTORP TEKNISKA GYMNASIUM | | Document type: FUSION 360 Drawing | Approved date: |
| First angle projection | | Title: E2 - Iron<br>Surface mmodeling exercise | DWG No.: PG-25107 |
| | | | Rev.: 0 / Date of issue: 2025-04-10 / Sheet: 1/1 |