This drawing is Perstorp Tekniska Gymnasium property and is protected according to existing law and may not without our approval be copied, imparted anyone or used without authorization

Revision history			
Rev.	Description	Created by	Rev. date

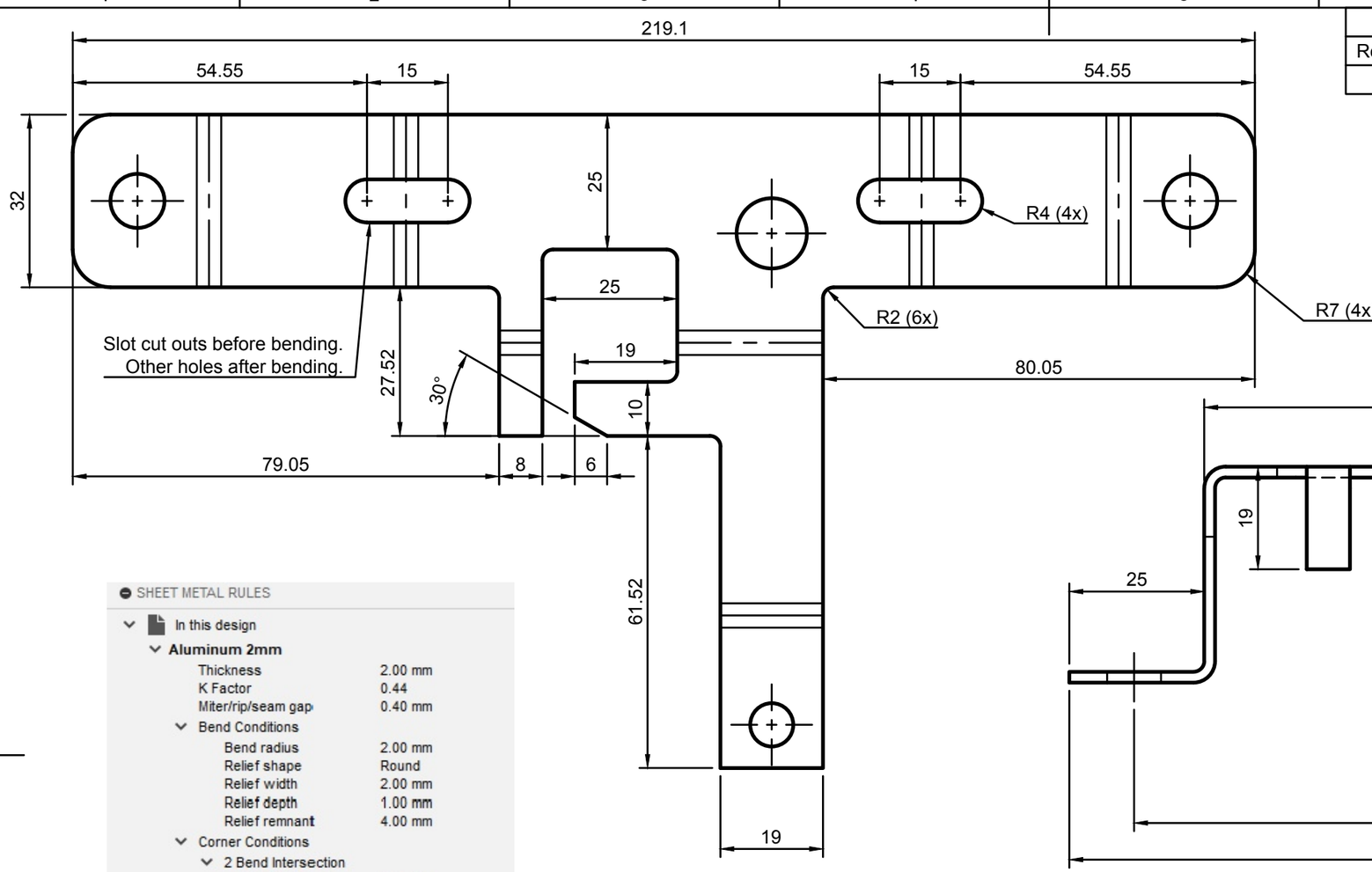

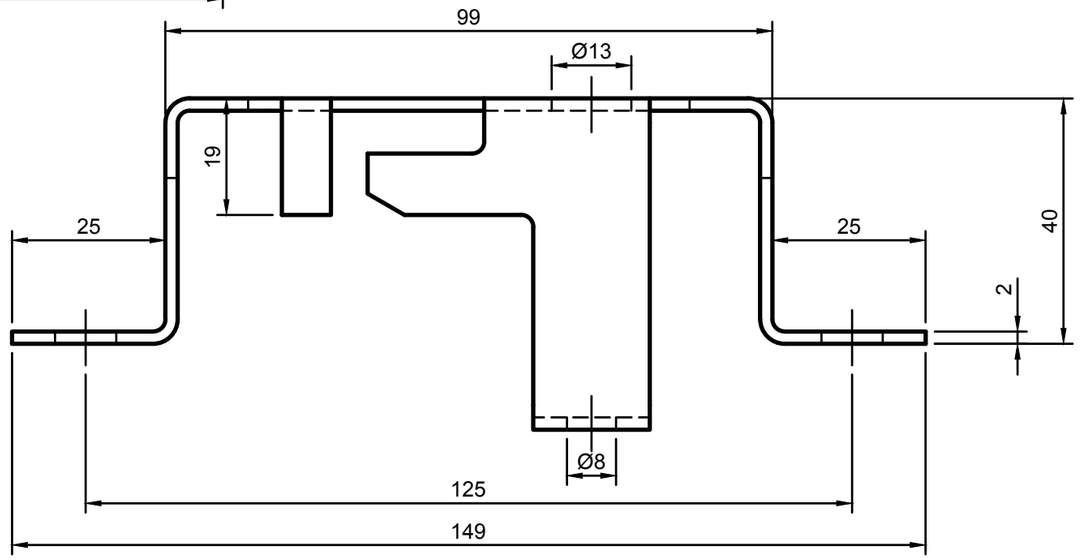

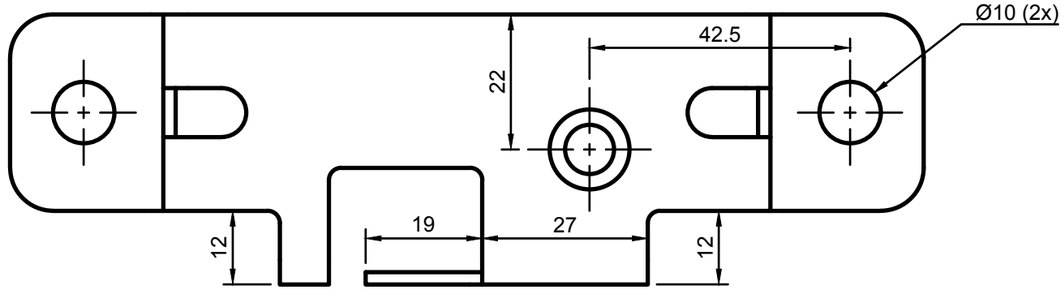

SHEET METAL RULES

In this design	
Aluminum 2mm	
Thickness	2.00 mm
K Factor	0.44
Miter/rip/seam gap	0.40 mm
Bend Conditions	
Bend radius	2.00 mm
Relief shape	Round
Relief width	2.00 mm
Relief depth	1.00 mm
Relief remnant	4.00 mm
Corner Conditions	
2 Bend Intersection	
Relief shape	Round
Relief size	8.00 mm
Relief placement	Intersection
3 Bend Intersection	
Relief shape	Full Round
Relief radius	2.00 mm
Library	

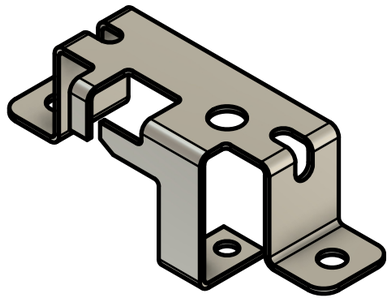

Item	Part Number	Material
1	F3 - Safety Clip	Aluminum

Parts List

General Tolerances		
Weld constr. ISO 5817 Class C	Castings ISO 8062 CT12	Threads ISO 965 6H/6g
Linear and angular dimensions		
Machined with cutting tools (does not include sawing)	ISO 2768-1-m	
Machined with non cutting tools (includes sawing)	ISO 2768-1-v	
Broken edges and angular dimensions	ISO 2768-1-c	

School subject	CAD1/CAD2
Scale	1:1
PERSTORP TEKNISKA GYMNASIUM	
First angle projection	

Created by	Jorgen Nilsson
Approved by	
Document type	FUSION 360 Drawing
Approved date	
Title	F3 - Safety Clip Sheet metal exercise
DWG No.	PG-24220
Rev.	0
Date of issue	2024-10-31
Sheet	1/1